TECHNICAL MANUAL

PART 4

SITE INVESTIGATION AND FOUNDATIONS

Version 1: 24/07/2017

Part 4 – Site Investigation & Foundations

4.1 General

WAYS OF ACHIEVING COMPLIANCE WITH THE REQUIREMENTS

The building should be designed and constructed in accordance with the guidance contained in the following appropriate documents:

England & Wales

Approved Document A - Structure
Approved Document B - Fire safety
Approved Document C - Site preparation and resistance to moisture
Approved Document D - Cavity Insulation
Approved Document E - Resistance to the passage of sound
Approved Document F- Ventilation
Approved Document H - Drainage
Approved Document J - Combustion appliances and fuel storage systems
Approved Document K - Protection from falling, collision & impact
Approved Document L - Conservation of fuel and power
Approved Document M - Access facilities for disabled people
Approved Document N - Glazing
Approved Document P - Electrical
Approved Document 7 - Materials and workmanship

Scotland

Section 0: General
Section 1: Structure
Section 2: Fire
Section 3: Environment
Section 4: Safety
Section 5: Noise
Section 6: Energy
Section 7: Sustainability

Scottish Technical Handbook sections:

Part A: General
Part B: Fitness of materials and workmanship
Part C: Structure
Part F: Combustion appliance installations
Part G: Preparation of Sites
Part H: Resistance to the passage of sound
Part J: Conservation of fuel and power
Part K: Ventilation
Part M: Drainage and Sanitary fittings
Part N: Electrical Installations

Northern Ireland

Part A: Interpretation and general
Part B: Materials and workmanship
Part D: Structure
Part E: Fire safety
Part F: Conservation of fuel and power
Part N: Drainage

Ireland

Technical Guidance Document A - Structure
Technical Guidance Document B - Fire safety
Technical Guidance Document C - Site preparation and resistance to moisture
Technical Guidance Document D – Materials and workmanship
Technical Guidance Document E - Sound
Technical Guidance Document F- Ventilation
Technical Guidance Document H - Drainage
Technical Guidance Document J – Heat producing appliances
Technical Guidance Document K – Stairways, Ladders, Ramps and Guards
Technical Guidance Document L - Conservation of fuel and energy
Technical Guidance Document M – Access and Use

4.2 Site Investigation

It is preferable that all Build-Zone registered sites should have a full site investigation report as outlined in this section. However, Build-Zone will require a full site investigation report if any of the following is noted or required:

- The surrounding land use was or is known to have been polluted
- The development site was or is known to have been polluted
- A desk top study such as "enviroseach" or other IT based system has indicated contamination within a 250m radius of the development boundary
- If directed to by BZSS's appointed Technical Auditor during the foundation pull to any of the plots
- The Building Control Body has requested a site investigation report as part of their plan check process or during the foundation pull

N.B. Build-Zone will not be able to offer Warranty cover on contaminated Custom Build sites.

Additional guidance is also contained in the following current design and construction standards or guides:

- BS 5930:1999+A1:2010 Code of Practice for Site Investigation

- **Building Research Establishment**
  - Report 211 Radon: Guidance on protective measures for new dwellings
  - Report 212 Construction of new buildings on contaminated land
  - Digest 318 Site Investigation for low-rise building: Desk study
  - Digest 348 Site Investigation for low-rise building: The walkover survey
  - Digest 363 Sulphate and acid resistance of concrete in the ground
  - Digest 383 Site Investigation for low-rise building: Soil description
  - Digest 414 Protective measures for housing on gas contaminated land

- **DETR [Department of the Environment, Transport and the Regions]**
  - 1989 Waste Management Paper 27: Landfill gas
  - 1994 Planning Policy Guidance: Planning and Pollution Control, PPG 23
  - 1997 CLR Report No 12: A quality approach for contaminated land consultancy

- **DETR Welsh Office**
  - Schedules of Industrial Uses and Potential Contaminants
  - 1990 Planning Policy Guidance: Development of Unstable Land PPG 14

- **DETR Welsh Office, Scottish Office**
  - Special Waste Regulations 1996 The Controls on Special Waste, how they affect you

The investigation of the geology and previous use of any site is fundamental to best practice.

Site investigation is often carried out to facilitate the design of roads, drainage provisions etc. However it can also provide information to allow for a suitable and cost effective design for substructure works.

The substructure for all plot(s) is/are to be designed by an appropriate fully insured building professional to accepted design criteria and the design presented to BZSS's appointed Technical Auditor as part of the plan check process.

Notwithstanding the points made above, if a site investigation is required as part of the foundation process, this must be undertaken by a competent Geotechnical Company. Copies of the report should be made available to Build-Zone and the Technical Auditor prior to the commencement of any site work which would constitute new works.

The purpose of the investigation is to identify the character and variability of the underlying strata of the site and the adjoining land (which may also affect the performance of the substructure). See diagram 4.01. This will enable the design of all the elements of the substructure to be best suited to the conditions particular to a site:

- Reducing extra construction costs through an economic foundation design
- Reducing the risk of unacceptable whole or differential settlement
- Reducing the risk of contractual disputes because of unforeseen design changes
- Ensuring the safety of site personnel
- 'Designing in' a construction that will suitably eliminate potential health hazards from contaminated land and determine how much unsuitable material should be removed

SITE INVESTIGATION PROCEDURES

The level of investigation required is generally decided after carrying out:

- Preliminary desk top study
- Site “walk over” study

This will then determine the following:

- The design of a suitable ground investigation programme e.g. by trial pits and/or boreholes
- Soil and rock classification including identification of fill materials or made ground
- Identification of groundwater levels
- Laboratory testing to determine physical and chemical characteristics
- Report and recommendations

Ground Investigation may include:

- Cable percussion boring
- Rotary drilling
- Trial pits - a minimum of two per plot is advised
- In situ testing
- Dynamic probing
- Rock discontinuity surveying
- Plate bearing testing
- Percolation testing-for soakaway drainage design
- Assessment of slope stability

Reports should show that the following have been considered:

- The risks of general subsidence or land-slip (e.g. caused by geological faults, excessive slopes, current and past mineral workings etc.)
- The effect of the proposed construction operations on the overall ground stability
- The risks caused by excessive vibration from adjacent sources
- The effect of ground water conditions, including level and flow
- The effect of flooding of the site, both before and upon completion of the construction
- The presence of existing substructures, sewers, drains and service runs and the effect they will have on the foundation design
- The extent to which ground water and subsoil contains or is contaminated with:
    - chemicals aggressive to concrete and other materials used below ground (e.g. sulphates, acids or strong alkaline substances)
    - materials which by expansion may disrupt the substructure
    - materials which might affect the health or safety of occupants in or near buildings on the site
    - the level of radon risk and the precautions required

CONTAMINATION ASSESSMENT

This is needed to ensure legislation regarding health hazards is complied with and the potential chemical attack to substructure work can be determined. An assessment of possible groundwater contamination can also be made.

This will include an assessment/testing of the following:

- Soils
- Groundwater
- Gas
- Radiological
- Biological

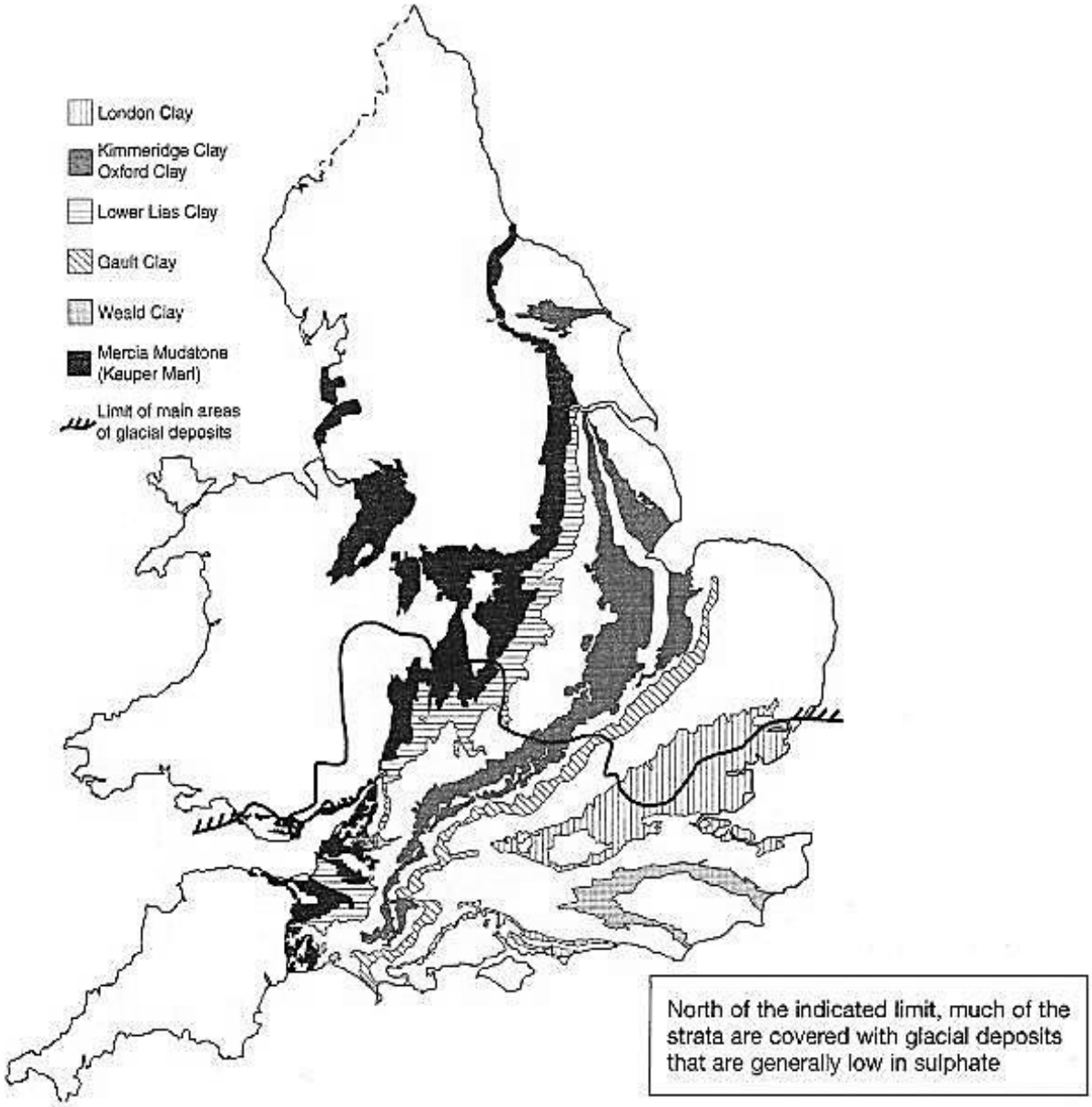

Diagram 4.01: Distribution principal sulphate / sulphide bearing strata in England and Wales

4.3 Environmental Risk Assessment of Land

INTRODUCTION

In order to build, appropriate Local Authority approval is always required. When a development is planned on previously used sites or land adjacent to a site containing a risk to the built environment, additional precautions are needed. This section provides guidance on the research and precautions needed in order to provide Build-Zone with protection against liabilities imposed by statute on the Developer or Land Owner. This applies to all developments on land ranging from green fields to sites with known or suspected contaminants present. This now also applies to buildings that are being converted for residential use.
The following outlines the process involved in site investigation and risk assessment for any contaminated site.

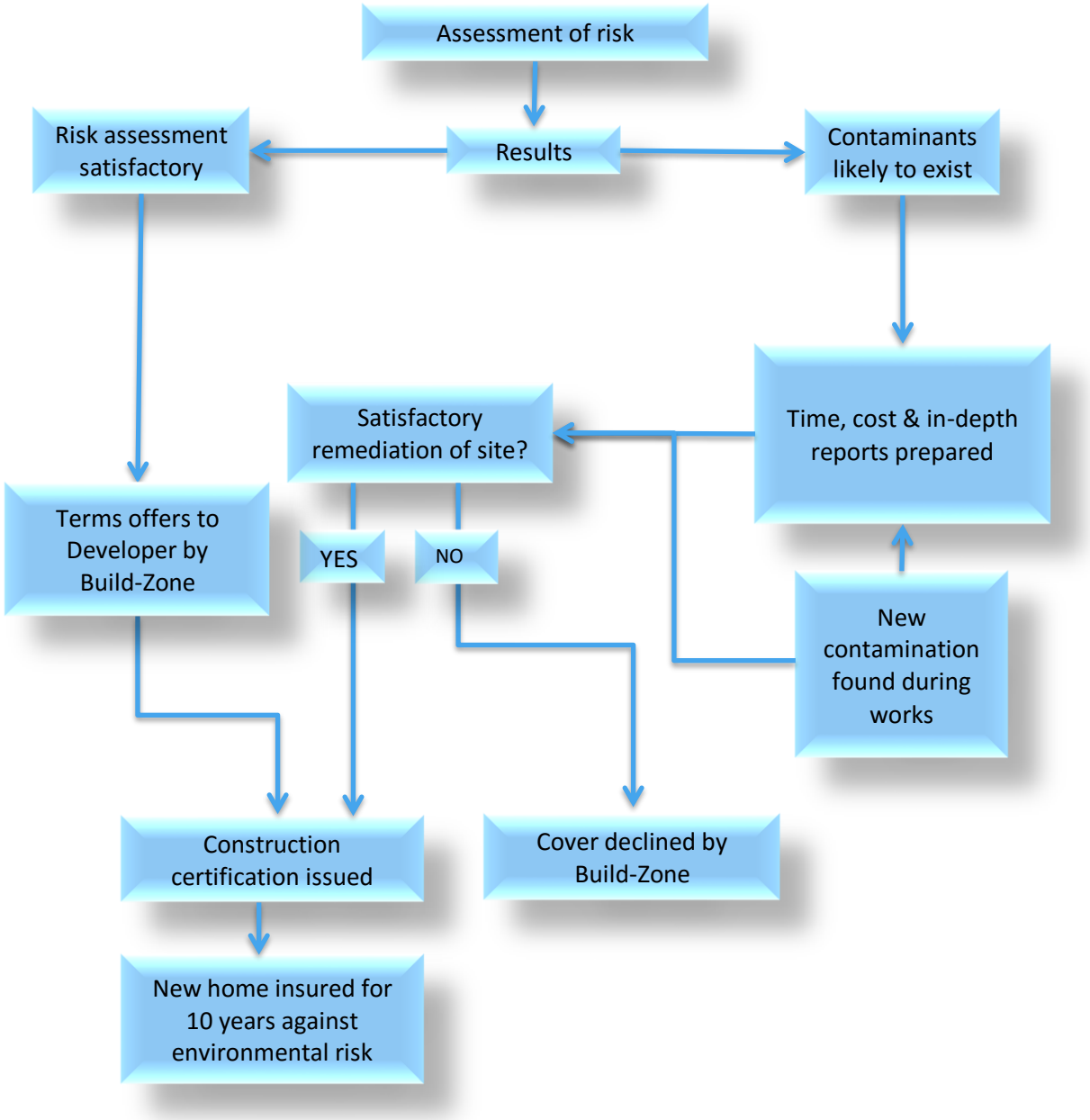

Contaminated Sites

Build-Zone will require copies of the following:

- Soil Investigation report
- Site Remediation Reports
- Environment Agency Approval

Historic Buildings

The aim is to improve the resistance to contaminants and moisture as much as possible but it has been recognised that this is not always practical. In arriving at an appropriate balance between historic building conservation and improving resistance to contaminants and moisture the advice of the Local Planning Authority's conservation officer should be sought at an early stage in the design process

Further information can be found within the following documents:

BS 7913:1998 Guide to the principles of the conservation of historic buildings SPAB Information Sheet 4 1986, "The need for old buildings to breathe".

BRE Report BR 267 1994 Major alterations and conversions

BRE GBG 25 1996 Buildings and radon

RISK ASSESSMENT

An assessment is required in all cases. The level and depth of the assessment will be determined by the historic knowledge of the site. A suitably qualified consultant should carry out the assessment.

The assessment of geotechnical & contaminated land should be carried out using the following framework:

Source	A substance or group of substances with the potential to cause significant harm
Pathway	Route by which a source could reach a target
Target	That which could be harmed by the source

Appointment of Consultants

Specialists and consultants must have:

- experience of similar projects
- detailed understanding of current legislation
- detailed understanding of and access to the relevant skills and expertise necessary for the project
- the ability to prepare comprehensive reports identifying hazards, risk assessment and conclusions drawn
- adequate Professional Indemnity insurance for the works undertaken

Definition of Contamination

The "Registers of Land Subject to Contaminated Uses" identify the following eight uses:

- Manufacture of gas, coke or bituminous material from coal
- Manufacture or refining of lead, steel or an alloy of lead or steel
- Manufacture of asbestos or asbestos products
- Manufacture, refining or recovery of petroleum or its derivatives, other than extraction from petroleum bearing ground
- Manufacture, refining or recovery of other chemicals, excluding minerals
- Final deposit in or on land of household, commercial or industrial waste other than waste consisting of ash, slag, clinker, rock, wood, gypsum, railway ballast, peat, bricks, tiles, concrete, glass, other minerals or dredging spoil; or where the waste is used as fertiliser or in order to condition the land in some beneficial manner
- Treatment at a fixed installation of household, commercial or industrial waste by chemical or thermal means
- Use as a scrap metal store, within the meaning of section 9(2) of the Scrap Metal Dealers Act 1964

The risk of other potential contaminants which might affect the insurability of the site should be researched to identify whether they occur on, or adjacent to the land.

A classification of potentially contaminating industries was published by the then DoE in 1991. The classification is a useful guide and is reproduced in table 4.02 below.

DOE CLASSIFICATION OF CONTAMINATING INDUSTRIES CATEGORY	PROFILE	RISK
Agriculture: Burial of diseased livestock	Not applicable	n/a
Extractive industry:		
Extracting, handling and storage of carbonaceous materials such as coal, lignite, petroleum, natural gas, or bituminous shale (not including the underground workings).	Coal mines and coal preparation plants: petrochemicals; Oil refineries and bulk storage of crude oil and petroleum	High
Extracting, handling and storage of ores and their constituents.	Mineral workings; mineral processing works. Note: Handling includes loading, transport, sorting, forming and packaging, and similar operations. Ore means any mineral, including non-metal bearing, except fuels	High
Energy industry: Producing gas from coal, lignite, oil and other carbonaceous material (other than from sewage or other waste), or from mixtures of those materials	Gas works, coke works and other coal carbonisation plants; Oil refineries and bulk storage of crude oil and petroleum products.	High
Reforming, refining, purifying and odourising natural gas or any product of the processes outlined above.	Gas works, coke works and other coal carbonisation plants; Oil refineries and bulk storage of crude oil and petroleum products.	High
Pyrolysis, carbonisation, distillation, liquifaction, partial oxidation, other heat treatment, conversion, purification, or refining of coal, lignite, oil, other carbonaceous material or mixtures and products thereof, other than with a view to gasification or making of charcoal.	Gas works, coke works and other coal carbonisation plants; Coal mines and preparation plants; Oil refineries and bulk storage of crude oil and petroleum products	High
A thermal power station (including nuclear power stations and production, enrichment and reprocessing of nuclear fuels).	Power stations (excluding nuclear power stations); Radioactive materials; Asbestos manufacturing works.	High
Electricity and sub-station.	Engineering works: Electrical and electronic equipment manufacturing equipment containing PCBs); Power stations.	High
Production of Metals: Production, refining and recovery of metals by physical, chemical, thermal or electrolytic or other extracting process.	Metal manufacturing, refining and finishing works; Electroplating and other metal finishing works; Iron and steel work; Non-ferrous metal works (excluding lead-works); Precious metal recovery works; Lead-works; Heavy engineering.	High
Heating, melting or casting metals as part of an intermediate or final manufacturing process (including annealing, tempering or similar processes).	Metal processing; Heavy engineering; Miscellaneous (High Street) trades.	High
Old forming processes (including pressing, rolling, extruding, stamping, forming or similar processes).	Metal processing; Heavy engineering; Shipbuilding, repair and ship breaking (including naval shipyards).	High to Moderate
Finishing treatments, including anodising, pickling, coating, and plating or similar processes.	Metal processing; Heavy engineering; Miscellaneous (High Street) trades; Metal manufacturing, refining and finishing works; Electroplating and other metal finishing works. Note: Metals are taken to include metal scrap.	High
Production of Non-metals and their Product:		
Production or refining of non-metals by treatment of the ore.	Mineral processing works.	High
Production or processing of mineral fibres by treatment of the ore.	Mineral processing works; Asbestos manufacturing works.	High
Cement, lime and gypsum manufacture, brickworks and associated processes.	Mineral processing works.	Moderate
Glass Making and Ceramics:		
Manufacture of glass and products based on glass.	Glass manufacturing.	High to Moderate
Manufacture of ceramics and products based on ceramics, including glazes and vitreous enamel.	Ceramics, cement and asphalt manufacturing works	High to Moderate
Production and Use of Chemicals:		
Production, refining, recovery or storage of petroleum or petrochemicals, or their by-products, including tar and bitumen processes and manufacture of asphalt.	Oil refineries and bulk storage of crude oil and petroleum products; Mineral processing works; Waste recycling, treatment and disposal sites; Drum and tank cleaning and recycling plants.	High to Moderate
Production, refining and bulk storage of organic or inorganic chemicals, including fertilisers, pesticides, pharmaceuticals, soaps, detergents, cosmetics, toiletries, dyestuffs, inks, paints, fireworks, pyrotechnic materials or recovered chemicals.	Chemical Works - Coatings (paints & printing inks) manufacturing works; Cosmetics and toiletries manufacturing works; Disinfectants manufacturing works; Fertiliser manufacturing works; Explosives, propellants and pyrotechnics (fireworks) manufacturing; Sealants, adhesives and roofing felt manufacturing works; Fine chemicals manufacturing works; Inorganic chemicals manufacturing works; Pesticides manufacturing works; Organic chemicals manufacturing works; Soap and detergent manufacturing works; Textile works and dye works; Pharmaceuticals; Miscellaneous (High Street) trades.	High to Moderate
Production, refining and bulk storage of industrial gases not otherwise covered.	Chemical works; Fine chemicals manufacturing works.	High

Engineering and Manufacturing Processes:		
Manufacture of metal goods, including mechanical engineering industrial plant or steel works, motor vehicles, ships, railway or tramway vehicles, aircraft, aerospace equipment or similar equipment.	Engineering works: Mechanical engineering and ordnance works; Vehicle manufacturing: Aircraft manufacturing works; Shipbuilding, repair and shipbreaking (including naval shipyards); Railway engineering works; Heavy engineering works.	Moderate
Storage, manufacture or testing of explosives, propellants, ordnance, small arms or ammunition.	Chemical works; Explosives, propellants and pyrotechnics manufacturing works.	High to Moderate
Manufacture & repair of electrical & electronic components & equipment.	Miscellaneous (High Street) trades; Electrical and electronic equipment manufacturing works (including works manufacturing equipment containing PCBS).	High to Low
Food Processing Industry:		
Manufacture of pet foods or animal foodstuffs. Processing of animal by-products (including rendering or maggot farming, but excluding slaughterhouses, butchering).	Food preparation and processing; animal and animal products processing works; Miscellaneous (High Street) trades.	Moderate to Low
Paper, Pulp and Printing Industry: Making of paper pulp, paper or board, or paper or board products, including printing or de-inking.	Pulp and paper manufacturing works; Printing works; Miscellaneous (High Street) trades.	High to Low
Timber and Timber Products Industry:		
Chemical treatment and coating of timber and timber products.	Timber treatment works; Miscellaneous (High Street) trades: Timber products manufacturing.	High
Textile Industry:		
Tanning, dressing, fellmongering or other processes for preparing, treating or working leather.	Animal processing works; Miscellaneous (High Street) trades.	High to Moderate
Fulling, bleaching, dyeing or finishing fabrics or fibres:	Textile works and dye works: Miscellaneous (High Street) trades.	Moderate
Manufacture of carpets or other textile floor coverings (including linoleum works).	Chemical works; Linoleum, vinyl and bitumen-based floor covering manufacturing work; Textile works and dye works.	Moderate
Rubber Industry:		
Processing of natural or synthetic rubber (including tyre manufacture or retreading).	Chemical works: Fine chemicals manufacturing works; Rubber processing works (including works manufacturing tyres or other rubber products).	High to Moderate
Infrastructure:		
Marshalling, dismantling, repairing or maintenance of railway rolling stock.	Heavy engineering; Dockyards and dockland; Railway land; Engineering works; Railway engineering works.	Moderate
Dismantling, repairing or maintenance of marine vessels, including hovercraft.	Shipbuilding, repair and shipbreaking (including naval shipyards), Dockyards and dockland.	Moderate
Dismantling, repairing or maintenance of road transport and road haulage; Garages and filling stations.	Road vehicle fuelling, service and repair: garages and filling stations; Transport and haulage centres.	Moderate
Dismantling, repairing or maintenance of air or space transport systems.	Engineering works; Aircraft manufacturing works.	Moderate
Waste Disposal:		
Treating of sewage or other effluent.	Sewage works and sewage farms	High
Storage, treatment or disposal of sludge including sludge from water treatment works.	Landfills and other waste treatment and disposal sites: Scrap yards, waste recycling, treatment and disposal sites: Drum and tank cleaning and recycling plants; Hazardous waste treatment plants; Landfills and other waste treatment or waste disposal sites; Metal recycling sites; Solvent recovery works.	High
Radioactive materials.		
Treating, keeping, depositing or disposing of waste, including scrap (to include infilled canal basins, docks or river courses).		High
Storage or disposal of radioactive materials.		High
Miscellaneous:		
Premises housing dry-cleaning operations.	Miscellaneous (High Street) trades; Profile of miscellaneous industries	High to Moderate
Laboratories for educational or research purposes	Research laboratories; Miscellaneous (High Street) trades.	Moderate to Low
Demolition of buildings, plant or equipment used for any of the activities in this schedule.	Demolition works	Moderate

Table 4.02: Environmental risk assessment of land

Research Sources

All of the following sources can be researched and a comprehensive report obtained from the SiteCheck service available from: Landmark Information Group Limited, 7 Abbey Court, Eagle Way, Sowton, Exeter EX2 7HY.
Tel: 01392 441700 Fax: 01392 441709 www.landmarkinfo.co.uk

OTHER SOURCES

- Thompsons Trade Directories - potentially contaminative industrial uses
- Local Authorities - Air Pollution Control, local nature reserves, Planning Applications, Planning Hazardous Substance Consents and Enforcements
- Ordnance Survey
- British Geological Survey - Land Fill Survey, Mines Quarries and Minerals, Solid Geology
- Environment Agency England and Wales - Discharge Consents, Red List Discharge Consents, Water Abstractions, Substantiated Pollution Incidents Relating to Controlled Waters, Prosecutions Related to Controlled Waters, Groundwater Vulnerability Mapping, Integrated Pollution Control (IPC), IPC Enforcements and Prosecutions, Landfill Sites, Waste Transfer, Treatment or Disposal Sites, River Quality Data, Registered Radioactive Substances
- Scottish Environment Protection Agency - Discharge Consents, Groundwater Vulnerability Mapping, Integrated Pollution Control (IPC), IPC Enforcements and Prosecutions, Air Pollution Control, Landfill Sites, Waste Transfer, Treatment or Disposal Sites, Prosecutions Relating to Controlled Waters, Registered Radioactive Substances, River Quality Data, Substantiated Pollution Incidents Relating to Controlled Waters
- English Nature, Countryside Council for Wales, Scottish Natural Heritage - Sites of Special Scientific Interest (SSSI), Marine Nature Reserve (MNR), National Nature Reserve (NNR)
- Department of the Environment Transport and the Regions - Area of Outstanding Natural Beauty, Planning Hazardous Substance Consents and Enforcements
- Department of Agriculture Fisheries and Food - Environmentally Sensitive Areas (Scotland)
- Scottish Office - Public Water Abstractions
- Welsh Office - Planning Hazardous Substance Consents and Enforcements
- Farming and Rural Conservation Council - Nitrate Vulnerability Areas, Nitrate Sensitive Areas, Environmentally Sensitive Areas (England and Wales)
- Forest Enterprise - Forest Parks
- National Radiological Protection Board - Radon Affected Areas
- Institute of Hydrology - River Network, Flood Plain

SITE ASSESSMENT

An appropriately qualified person must carry out a walkover inspection of the site and adjacent areas. The purpose is to assess and correlate the information from the desk top assessment with the physical evidence on site. A walkover inspection will assess:

- The surface ground conditions
- Site and adjacent area topography
- Any residues in stores, tanks or pipes
- Any evidence of contamination
- Any surface or sub-surface impediments to development
- The extent and location of any trial excavations, boreholes, samples or other physical investigation required

Following the Site Assessment

Evidence from the desk top assessment and the walkover inspection will determine if further ground investigation is necessary. The preliminary information gathered will be used to establish the ground investigation requirements and to identify:

- Any necessary safety precautions
- Location and extent of boreholes, trial pits etc.
- Samples or other physical investigation required

Health and Safety

All work must comply with the Health and Safety at Work Act. Before any work starts a COSHH (Control of Substances Hazardous to Health) assessment must be made and a safety plan prepared to cover all the works including those of any sub-contractors. The Construction (Design and Management) Regulations 2015, impose a responsibility to ensure safety regulations are met.

Preparation for Ground Investigation

Where it is necessary, buildings, structures or rubble may have to be removed. Care must be taken not to spread contamination during site clearance works. Where contaminants are suspected, tests to identify them will be necessary. If rubble, wastes, residues etc. are likely to interfere with the investigation they should either be removed or safely contained. This work will normally be carried out by specialists.

Remote Sensing

Techniques such as ground penetrating radar, infrared photography or thermography can be used to detect unusual ground conditions caused by geotechnical or chemical conditions. The benefits of remote sensing should be considered.

Trial Pits and Trenches

BS EN 1997-2:2007 gives guidance. Trial pits and trenches are most useful for shallow depth investigation up to 3m to 4m.They allow good visual inspection, particularly in areas of fill or where the strata has been disturbed. Samples may be taken from any location in the trial pit or trench but the location must be accurately recorded and annotated as a disturbed sample.

Boreholes

BS EN 1997-2:2007 gives guidance on drilling techniques in various ground conditions e.g:

- Rotary drilling - boulder clay and rock
- Shell and auger - soils and weak rock
- Continuous flight auger – soils

Boreholes are normally used when the ground to be investigated is below 4m to 5m. Useful for:

- Confirming deep geological conditions
- Taking disturbed and undisturbed samples
- Establishing the location of groundwater
- Groundwater sampling and monitoring
- Determining the hydrology and water permeabilities
- Gas monitoring

Spike Tests

Spike tests are for detecting ground gases and should be used where the desk top assessment suggests:

- There is fill material on the site
- There is a landfill site within 250m
- There are pathways for gas migration

If spike test surveys reveal methane levels > 1.0% v/v or carbon dioxide levels > 1.5% v/v further investigation will be needed. Spiking surveys are straight forward but if gas is not detected it cannot be assumed that none is present. As with all tests, results should be analysed by a suitably qualified experienced person.

Probe Tests

Used to determine the density of the soil, also for sampling and monitoring environmental hazards e.g. chemicals, gases, liquids etc.

Sampling

BS EN 1997-2:2007 and BS 10175:2001 give guidance on the spacing of samples (See table 4.03). The strategy must be to ensure that areas of contamination are not missed. The purpose is to determine the range of chemicals in the ground and groundwater and the geotechnical properties. The pattern of sampling must be dependent on the findings of the preliminary investigations and will be most frequent in areas of known or suspected contamination. An accurate plot of all sampling points is essential.

Area in Hectares	Minimum sampling points
0.5 ha	15
1.0 ha	25
5.0 ha	85
Spacing between points: 10 to 30m (BS EN 997-2:2007)	

Table 4.03: Sampling for contamination assessment (BS10175:2001)

Sample Handling, Analysis and Testing

Packaging and handling of samples for analysis must be undertaken using appropriate methods. Analysis must be carried out by properly qualified and accredited laboratories that can demonstrate their experience in testing environmental samples, e.g. the National Measurement Accreditation Service (NAMAS) scheme or UKAS.

- In-situ testing – e.g. simple physical, geological and soil bearing capacity test.
- Laboratory testing – chemical testing of rocks, soils, gases and groundwater. Physical testing of strength, relative density, consolidation properties, permeability, etc.

Analysis – Testing should include tests for water soluble boron, total sulphates, phenols and cyanide, sulphide, solvent extractable material, pH levels and total metals: arsenic, cadmium, chromium, copper, lead, mercury, nickel, selenium and zinc.

RISK ASSESSMENT

Following the site investigation, an assessment which includes the identification of health and environmental risks will be required. If a risk has been identified the assessment must be followed by evaluation and management through a remediation scheme.

RISK MANAGEMENT

Land risk management includes the identification and control of:

- Sources of potential hazards
- Receptor at risk or target e.g. adjacent river, agricultural land, house foundations and structure, people living or working on the land, workers during remediation, construction and future maintenance
- Critical pathway – the route by which the hazard can gain contact with the receptor

Hazard Identification

A hazard can be identified at any stage of the site assessment and can be defined as a situation with the potential to cause harm to the receptor and can be geotechnical, biological, chemical and physical. Hazards, critical pathways and receptors can be identified from the desk top assessment and will be confirmed and quantified (or not) by the ground investigation.

Hazard Assessment

Factors involved in the assessment are:

- The nature and intensity of the hazard
- The critical pathway between the source and the receptor
- The nature of the pathway, as a barrier or partial barrier or the potential to increase the intensity of the hazard

Risk Control and Remediation

Remediation is required where an unacceptable concentration of contaminants has been found or where there are unsatisfactory geotechnical conditions. It may involve avoidance, control, reduction or removal of hazards. Options include:

- Changing layouts to avoid contaminants or critical pathways
- Barriers or protective measures in construction
- Excavation and removal of contamination to a licensed landfill or incinerator
- Treatment on site by means of destructive processes, e.g. biological, chemical, physical, thermal or solidification in cement slurry etc.
- Containment by covering, capping or barrier walls
- Venting of gases by passive or active means
- Vibro replacement/compaction or preloading
- Specialist foundation design, eg rafts, piles etc.
- Physical barrier eg. membranes

Timing

The solution chosen may be influenced by time as some solutions take a long time to complete. This does not however alter the need for effective remediation. To avoid abortive work all necessary consultations must take place to ensure the acceptability of the chosen solution.

Proposal and Method Statements

A method statement should include:

- Original risk assessments
- Remediation objective and proposed method for dealing with the ground conditions, groundwater and sub-soil/landfill gases
- Classification of contaminants, waste materials, residues etc., and methods of control/disposal
- Description of working methods
- Supervision and monitoring
- Programme of sampling and testing

Reports

Reports should contain the following, where appropriate:

- Site logs and diaries
- Drawings and surveys of remediated areas
- Photographs of works to be covered
- Specifications of materials used
- Monitoring and test results - during and post remediation
- Confirmation of all consultation with statutory authorities
- Details of soil movements and waste transfer notes

GASES

Methane and Landfill Gases

The generation of such gases as methane and carbon dioxide is caused by bio-degradable material and anaerobic micro-organisms from landfill sites. However, other gases can occur naturally and should be treated in the same manner.

Radon

Radon is a radioactive gas produced by the natural decay of uranium and radium. It is a radioactive, colourless and odourless gas. Radon released from these natural underground sources may or may not readily reach the surface. It is thought that the level of radon may be five times higher in dry subsoils when compared with similar but saturated soils.

Previously it was thought that the presence of radon gas only existed in parts of the Southwest, Northamptonshire and Derbyshire. Recent research has revealed the presence of radon in areas throughout the UK. As a consequence of this research there is now a need to provide precautions to reduce ingress of the gas in all buildings whether new or existing, including extensions.

The BRE report BR211 – Radon Guidance on protective measures for new dwellings, 2007 - gives guidance on areas more likely to be at risk and also measures to provide protection.

The Site investigation report should include details of the radon risk and therefore measures to be incorporated. Further guidance details can be found in Approved Document C.

Construction Details

Radon is generally drawn into buildings because of small "gaps" within the construction in the same way that air is drawn into buildings. This is mainly through floors. (See diagram 4.04)

Key to ingress routes:

1. Through cracks in solid floors
2. Through construction joints
3. Through cracks in walls below ground level
4. Through gaps in suspended floors
5. Through cracks in walls
6. Through gaps around service pipes
7. Through cavities in walls

Possible locations for gas accumulation:

A Wall cavities and roof voids
B Beneath suspended floors
C Within voids caused by settlement or subsidence
D Drains and soakaways

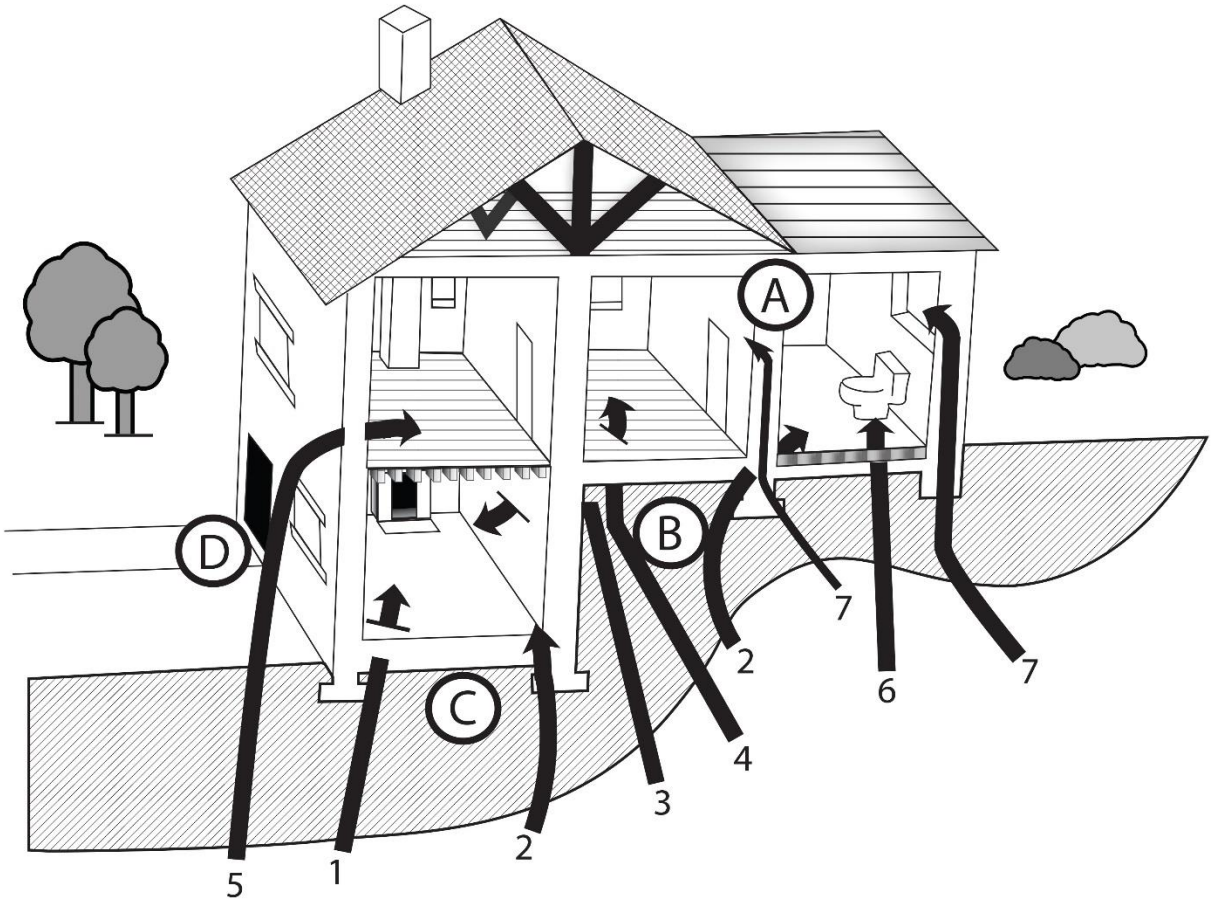

Figure 4.04: Locations for contamination

Low Level Precautions

GROUND-BEARING SLABS

Generally a 1200gauge (300 micrometre) certified membrane is laid under the 100mm concrete slab and carried over the external cavity wall to form a cavity tray. To eliminate the risk of a structural slip plane it is recommended that the membrane is taken below the horizontal dpc in the external leaf. Weep holes should be provided to drain the tray.

IN SITU SUSPENDED SLABS

Generally a 1200gauge (300 micrometre) certified membrane is laid above the structural slab (this reduces the risk of damage to the membrane should the structural slab move) and carried over the external cavity wall to form a cavity tray. To eliminate the risk of a structural slip plane it is recommended that the membrane is taken below the horizontal dpc in the external leaf. Weep holes should be provided to drain the tray.

Remedial Action

- If it is suspected or known that there are contaminated gases below the proposed building or that the ground covered by the building is within 250m of a landfill site, further studies will be required to determine if any further remedial actions are necessary.
- The following should be considered for buildings near landfill sites:
  - Methane levels below 1% - suspended concrete floor (ventilated) will be adequate.
  - Carbon dioxide levels of 1% - possible measures to prevent ingress to building.
  - Carbon dioxide levels of 5% (or more) - specific design measures to be taken.
- Passive protection is the most viable method of ensuring that contamination levels remain at an acceptable level.
- In other cases, the advice of an Expert should be obtained. The research plus the Expert's recommendations should be used to assess the current and future risks posed by the gases. The design of measures to protect the building and its occupants should be included within the design of the building. Arrangements should also be made for monitoring and maintenance.

SOLID CONTAMINANTS

There are several possible courses of action, these include:

- Sealing: this is achieved via the use of an imperforate material laid between the building and the contaminant. This must be sealed at joints, service entries and the edges etc.
- Removal: all of the contaminated ground should be removed to a depth of 1.0 m below the level of contamination - unless the Local Authority agrees to less. This should be removed from site to a licensed tip.
- Filling: the ground covered by the building should be covered to a depth of 1.0m with materials which will not react with any remaining contaminant.

Remedial Action

If only moderate contamination has taken place, handling of the fill materials should comply with both the "Health and Safety at Work Act 1974" and the "Control of Pollution Act 1974". The main contractor will also be required to produce a construction stage health and safety plan, detailing their management structure, method of working and information provided to the workforce as per the Construction Design and Management (CDM) Regulations 2015.

All contaminated materials should be removed to a licensed tip.

Any service trenches, in only moderately contaminated ground, should be excavated and filled with clean stone so that site operatives do not become endangered during future maintenance.

Fill

Site fill and consolidation of subsoil under paths, drives and outbuildings etc. shall be carried out using non-organic materials and achieve an appropriate level of compaction to avoid long term "self" consolidation, and due account being taken of the final use of the filled area.

Hazardous Conditions

Only the total removal of the contaminants will provide a complete remedy. Such procedures should only take place with the benefit of Expert advice.

Further guidance may be obtained from the BS Draft for Development BS 10175:2001. Code of Practice for the Identification of Potentially Contaminated Land and its Investigation and BS 5930:1999+A2:2010 Code of Practice for Site Investigations.

4.4 Japanese knotweed

GENERAL

Japanese Knotweed is a vigorously growing and hardy plant, which will cause damage to buildings if left untreated. It was introduced in this country in the early part of the last century to stabilise railway embankments and as ornamental shrubs. It is more evident in some parts of the country.

Japanese Knotweed can spread rapidly from a clump to adjacent uninfested land by lateral growth of rhizomes. Knotweed spreads to non-adjacent uninfested areas by a number of means. These are principally through the transport of soil containing Knotweed rhizomes during earthworks, by fly tipping, the dumping of cut knotweed on rubbish tips and by rhizomes being washed downstream after being eroded from riverbanks.

CONTROL STRATEGY

Control of existing Knotweed will only be achieved by a planned programme which includes:

- A survey of the area of Knotweed to be controlled
- Liaison with interested and affected parties
- Informing land owners and users, including those adjacent to the control area, that the area is to be subject to Knotweed control
- Notification to the Local Authority where required
- Implementation of control
- Monitoring of the effectiveness of control and any modification of the control strategy which is appropriate
- Logging of all control measures and their effectiveness to give a databank for future control efforts

Control Guidelines

Approved personnel, in compliance with The Control of Pesticides Regulations 1986, shall carry out control.
A control strategy should consider the whole of the area infested and should not be restricted by field boundaries. Knotweed can re-infest an adjacent area in spite of the presence of a partitioning boundary such as a hedge or wall.

A method statement should be provided on the chosen form of control. The control method selected may be chemical, mechanical, removal or a combination of some or all.

Great care must be taken adjacent or near to watercourses. In these areas the Environment Agency should be consulted prior to the use of herbicidal treatments to avoid contamination of the watercourse.

www.environment-agency.gov.uk

In areas of drives, paving or other hard surfaces, removal may be the only course of action.

Complete Removal

Strands of Knotweed may be excavated and removed with the surrounding soil to be burned or deep buried in a landfill at least 10m deep. This is a very expensive and time consuming solution for large strands. It is only effective with complete removal of all the underground parts of the Knotweed plant. Under no circumstances should shallow burial of Knotweed infested soil be carried out.

If this method of control is used it is advised that the site is revisited at least once a year to remove any re-growth of the plant.

More detailed guidance on Japanese Knotweed can be found at:

www.gov.uk/japanese-knotweed-giant-hogweed-and-other-invasive-plants

www.environment-agency.gov.uk

4.5 Foundations

GENERAL

Every dwelling should be designed and constructed in accordance with the guidance contained in the following appropriate documents:

Approved Document A – Structure (England & Wales)
Technical Standards Part C – Structure (Scotland)
Technical Guidance Document A – Structure (Ireland)
Part D: Structure (Northern Ireland)
Additional guidance is also provided in the following current design and construction standards:
BS 5950-3-1:1990+A1:2010 Structural use of steelwork in building
BS 6399-1:1984 Loadings for buildings
BS EN 1997-1:2004 Code of practice for foundations
BS 8103-3:2009 Structural design of low rise buildings
BS 8110-1 Structural use of concrete
CP 3, Chapter V, Part 2 The Small Buildings Guide (Scotland)

The Building Control Authority and BZSS's appointed Technical Auditor should be consulted at the design stage in order to agree variable design data such as the safe loadbearing capacity of the ground on problem sites.

The Building Control Authority and BZSS's appointed Technical Auditor should be informed if deviations from the approved plans are made during the course of the works, or if unforeseen variations in the ground conditions are encountered.

Construction works associated with this Section should be approved before being covered up. Sufficient notice, in accordance with current Build-Zone procedures must be given in order to allow for satisfactory inspections to take place.

FOUNDATION WORK

Foundations and ground consolidation works should be designed and supervised by a suitably insured and qualified building professional when not in accordance with either:

Approved Document A (England & Wales)
Technical Standards C (Scotland)
Small Buildings Guide (Scotland)
Technical Guidance Document A – Structure (Ireland)
Part D: Structure (Northern Ireland)
Generally, foundation work should comply with BS 8000-1:1989, 2.1 & 5, and BS EN 1997-1:20048004.

Further guidance is available in Building Research Establishment Publication AP34, Foundations for Low Rise Buildings, which provides guidance on:

- Site investigation
- Foundations and soils
- Trees
- Fill and hardcore
- Shrinkable clay soils
- Mini-piles

For minimum width of foundation and dimension see Table 4.05 & 4.06 (both reproduced from Building Regulations Approved Document Part A 2004). Concrete for foundations should be selected in accordance with BS 8110, BS 5328 or Table 4.06.

Hand mixing of concrete on site for structural elements is not acceptable to Build-Zone unless it is a quality controlled mix, produced under BS EN ISO 9001 conditions. Build-Zone may also ask for other onsite and laboratory testing including but not limited to cube testing.

SPECIALIST FOUNDATIONS

These include vibratory ground improvement, piles and rafts (and associated ground beams).

These foundations should be designed by a suitable Expert (Structural Engineer) and installed by a specialist contractor. The work on site shall be supervised by an Expert that is independent of the persons carrying out the specialist foundations unless specifically agreed with Build-Zone. The Expert should be satisfied that the design is suitable for the site conditions and that the work on site is as designed.

It should be noted that copies of specialist installer's piling logs and associated test reports may be requested by Build-Zone.

DIMENSIONAL ACCURACY

The dimensional accuracy of the completed foundations should be appropriate to the type of superstructure construction. In particular, the accuracy should be within the tolerances specified by the designer of the superstructure.

			Total loads of load bearing wall not more than (kN/linear metre)(bend)					
Minimum width of strip foundations			20	30	40	50	60	70
Type of soil	Conditions of subsoil	Field test application	Min. with of strip foundation (mm)					
I rock	not inferior to sandstone limestone or firm chalk	requires at least a pneumatic or other mechanically operated pick for excavation	In each case equal to the width of wall					
II gravel sand	compact	requires pick for excavation. Wooden peg 50mm squares in cross section hard to drive beyond 150mm	250	300	400	500	600	650
IV clay sandy clay	firm	can be moulded by substantial pressure with the fingers and be excavated with graft or spade	300	350	450	600	750	850
V sand, silty sand, clayey sand	loose	can be excavated with a spade. Wooden peg 50mm square	400	600	*	*	*	*
VI silt, clay sandy clay, silty clay	soft	fairly easily moulded in the fingers and readily excavated	450	650	*	*	*	*
VII silt clay sandy clay silty clay	very soft	Natural sample in winter conditions. Exudes between fingers when squeezed in fist	600	850	*	*	*	*
* **Note:** In relation to subsoil types V, VI and VII, foundations do not fall within the provisions of this section if the total load exceeds 30kN/m.								

FOUNDATIONS DIMENSIONS

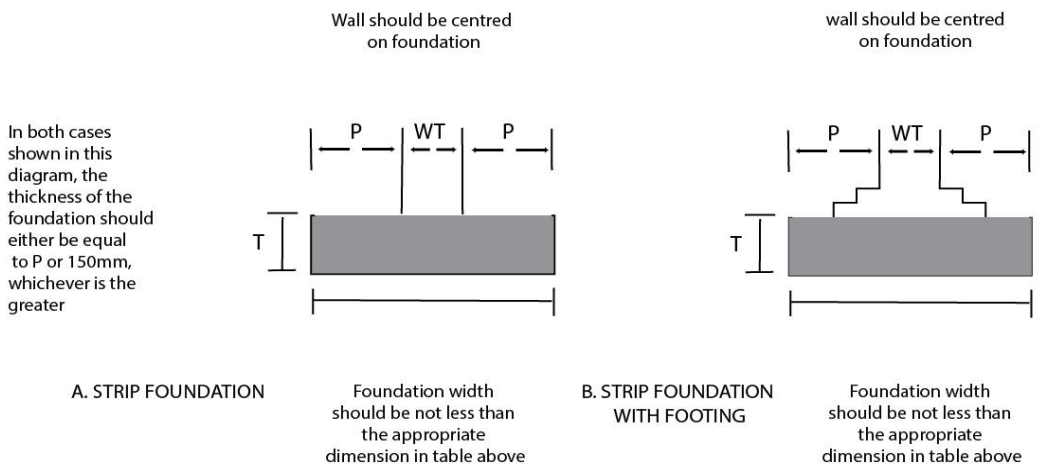

Table 4.05: Minimum width of foundations

CONCRETE

Specifying concrete mixes for various uses:

Application	Standard Mix	Designated Mix	Compressive strength@28 days N/mm^2 (MPa)	Suggested workability slump (mm)	Suggested method of compaction
Foundations					
Blinging and mass concrete fill	ST 2	GEN 1	10.0	75	Poker or beam vibration and/or tamping
Strip footings[1]	ST 2	GEN 1	10.0	75	
Mass concrete foundation[1]	ST2	GEN 1	10.0	75	
Trench fill foundation[1]	n/a	GEN 1	10.0	125	Self compacting
Reinforced foundation[1]	n/a	RC 35	35.0	75	Poker
Foundation in class 2 sulphate conditions[2]	n/a	FND 2	35.0	75	Poker
Foundation in class 3 sulphate conditions[2]	n/a	FND 3	35.0	75	Poker
Foundation in class 4A sulphate conditions[2]	n/a	FDN 4A	35.0	75	Poker
Foundation in class 4B sulphate conditions[2]	n/a	FDN 4B	35.0	75	Poker
Other reinforced and prestressed concrete applications					
Reinforced or pre stressed concrete: mild exposure	n/a	RC 30	30.0	75	Poker
Reinforced or pre stressed concrete: moderate exposure	n/a	RC 35	35.0	75	Poker

[1]In non - aggressive soils i.e. Class I sulphate conditions as given in table 7a BS 5328: 1:1991
[2]See table 7a BS 5328: 1:1991 for all sulphate conditions

Definitions

Standard mix (ST)	Designated Mix (GEN,FND,RC,PAV)
A standard mix is a concrete designed using the materials and mix proportions given in BS 8328-1-1991 section 4 and is suitable for most house construction activities. Note: Standard mixes should not be used in aggressive soil conditions where the soil, the ground water or any adjacent material contains sulphates or other aggressive chemicals.	Designated mixes are designed and specified in accordance with BS 5328:1:1991. It is a quality controlled mix, produced under BS ENISO 9001:2008 conditions. The purchaser orders the mix by specifying its required strength and is intended use ie RC to be used for reinforced concrete and GEN for general use

Table 4.06: Selection guide to the use and specification of Standard and Designated concrete mixes

STRIP AND MASS FILL FOUNDATIONS

There are a number of different types of foundations, the most common of which are shown in diagrams 4.07 and 4.08 below.

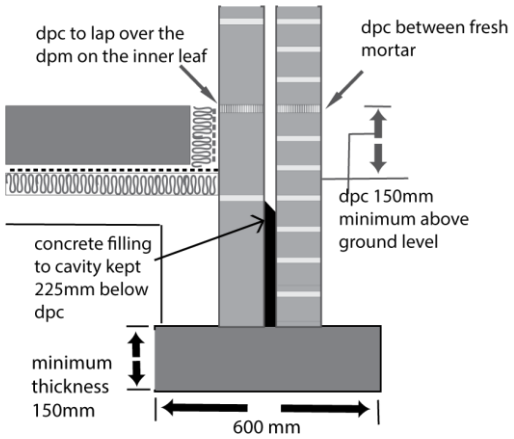

Diagram 4.07: Strip foundation

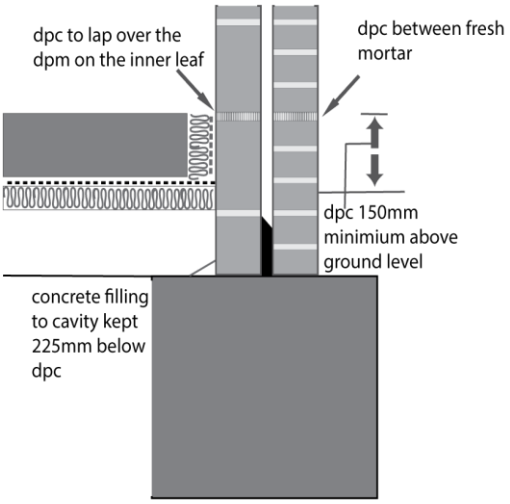

Diagram 4.08: Mass Fill foundation

Subsoil Conditions

The subsoil should not:

- Be "made up" ground.
- Impair the stability of the structure by being a weaker type of soil at foundation level.

Design

The following provisions should be taken into account:

- Strip foundations should be 600mm minimum width.
- Foundations should be situated centrally below the wall.
- Minimum thickness of strip foundations should be 150mm.
- Steps in foundations must not be of a greater dimension than the thickness of the foundation.

Where foundations are stepped (on elevation) they should overlap by twice the height of the step, by the dimension of the foundation, or 300mm, whichever is the greater.

Depth

The depth of all foundations will be determined by specific site conditions. All foundations must bear onto virgin stable sub-soil. Except where strip foundations are founded on rock, the strip foundation should have a minimum depth of 450mm, measured from finished ground level, to their underside to avoid the action of frost. This depth however, will commonly need to be increased in areas subject to long periods of frost or in order that loads are transferred to suitable ground.

Where trees are situated close to a proposed building founded on a (plastic) clay soil, the foundation depth/design will be affected. Suggested foundation depths have been included with this manual. In clay soils with a plasticity index greater than or equal to 10%, strip foundations should be taken to a depth where anticipated ground movement will not impair the stability of any part of the building taking into account of the influence of vegetation and trees on or adjacent to the site.

The depth to the underside of foundations on clay soils should not be less than 750mm measured from finished ground level, depths may need to be increased in order that loads are transferred to suitable ground.

Proposed Shrub Planting

The planting of shrubs can have an effect on foundations, in particular Cotoneaster, Ivy, Pyracantha and Wisteria can have a detrimental effect on foundations. Where the planting of shrubs is proposed the foundations should be designed to take account of the possible effect these may have on the foundations. It is recommended that shrub planting is no nearer the foundations than given in the table below (from nearest foundation):

Plasticity Index %	Minimum distance from foundation in m
High >40%	3.0
Medium 20%-40%	2.5
Low 0%-20%	2.0

RAFT FOUNDATIONS

Raft foundations should be designed by a suitable Insured and qualified Building professional e.g. a Structural Engineer.

Where a Party Wall is to be built attention must be given at an early stage to the construction of the Party Wall. Not all wall constructions are acceptable when a raft is being used.

Cost comparisons between raft and other types of foundation are only feasible when related to specific cases but some influencing factors are noted below. The edge treatment of a raft provides the main problem of structural design, building details and visual effect.

Advantages

- Simple machine excavation without trenching
- Excavation less liable than trenches to become waterlogged or damaged in bad weather
- Less interference with subsoil water movements
- May eliminate need for awkward below-ground walling by bricklayers
- In poor sites, they avoid penetrating poor bearing materials just below the surface

Disadvantages

- May not be acceptable for some loading and soil conditions. For example, where because of the proximity of trees and the nature of the subsoil, it would require a strip foundation excavation depth in excess of the distance from the vegetation in a cohesive subsoil then a raft design is not acceptable
- Ducts and pipe chases in the floor present problems
- Precautions usually need to be taken against drying, shrinkage or frost heave of the ground beneath the raft perimeter
- Unequal load distribution, e.g. piers, may cause problems
- Rafts are seldom worth considering unless the site is substantially level
- The quality of material beneath the raft, of the raft concrete and the correct positioning of its reinforcement, are more important than in strip foundation

In the above scenarios a raft design is not acceptable to Build-Zone.

Edge of Raft Detail

In determining the type of edge treatment for rafts the following points should be considered:

- Provision of reasonable support for perimeter wall loads
- Prevention of either frost heave or drying shrinkage of the ground beneath the edge of the raft, the top of the concrete of the raft edge should be a minimum 450mm below finished ground level
- Simple and efficient damp-proofing
- Accommodation of minor variations in ground levels
- Appearance
- Permanence of satisfactory support conditions
- Protection of steel and durability of reinforced concrete

Suggested raft edge details are shown below.

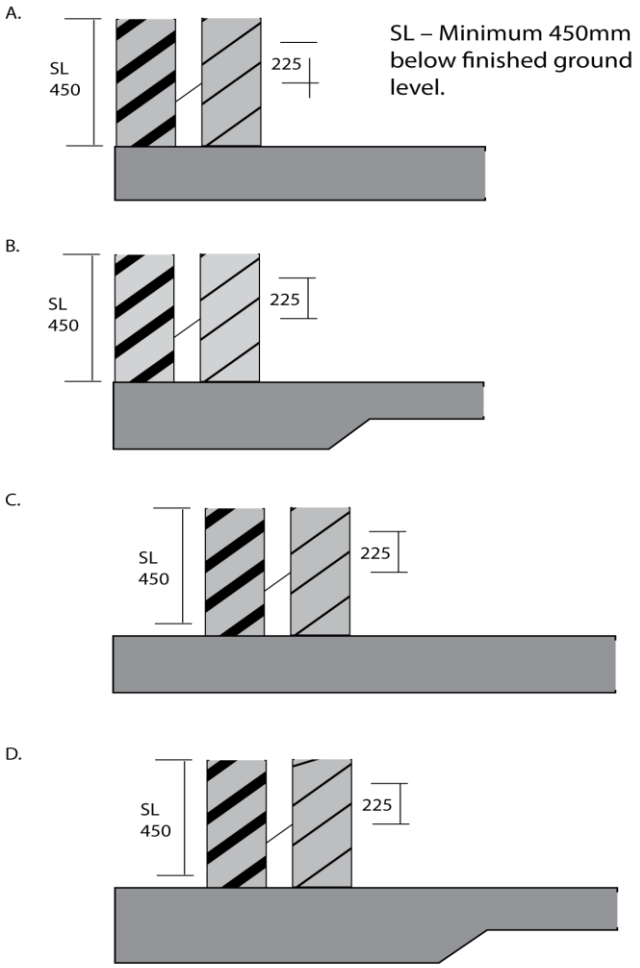

Reasonable support of perimeter wall loads
A is suitable only for light loads. Load is eccentric and heavy loads produce deflection and require a thicker slab and heavier reinforcement.

B is different from A in that isolated pier loads can be spread along the edge of the slab. Loses advantage of single thickness slab and is unsuitable for mining areas, which require single thickness slab laid on level bed of sand and polythene sheet.

Compared to A and B, C provides better spread of load and allows a uniform thinner slab to be used.

D loses the advantage of uniform slab thickness but facilitates placing of mesh reinforcement and spreading of isolated pier loads along edge of slab. Not suitable for mining areas.

PILED FOUNDATIONS AND FLOORS

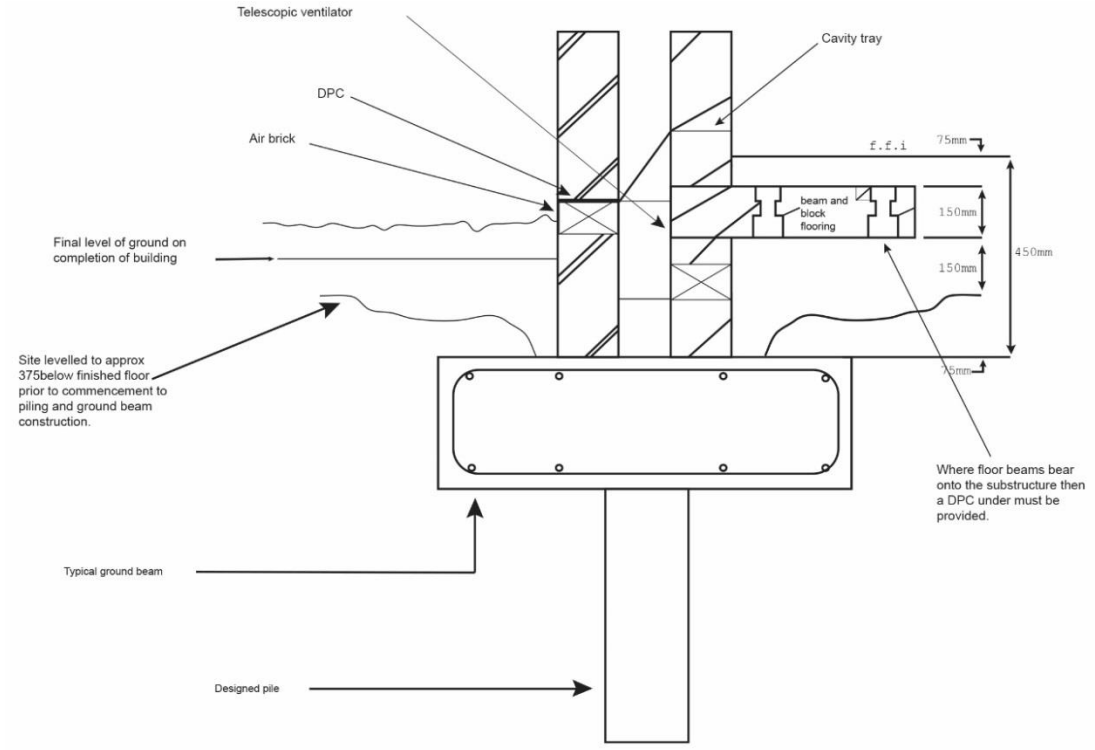

Diagram 4.09: Typical reinforced pile cap detail

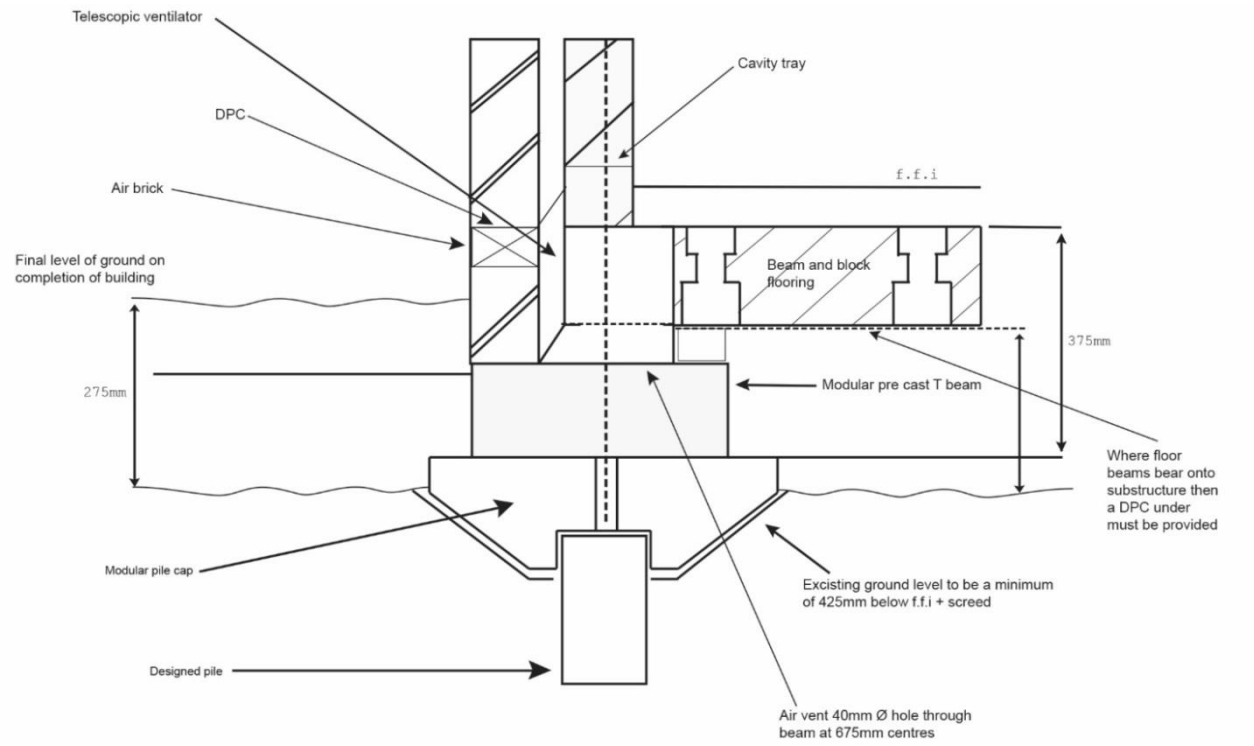

Diagram 4.10: Modular foundation system

Short Bored Piles

The Tee Beam System comprises inverted Tee shaped precast reinforced concrete ground beams designed to carry wall and floor loadings and supported on pile caps which may be either standard precast components or in-situ concrete depending upon loadings and layouts (see diagram 4.10). The system may be used in clay heave susceptible conditions, leaving voids or void formers beneath the beams and caps, and applying heave precautions to the piles. All external, internal, partition and party walls can be accommodated using this system. Delivery and installation should all be carried out in accordance with the manufacturer's instructions.

Why Use Piles

It negates the use of deep uneconomic trenches together with the safety implications of excavating such foundations:

- Deep trenches involve high excavation and cart away costs
- Deep trenches require shuttering for safety at work measures, as a result making the provision of slip membranes and heave precautions (void formers) difficult to place with confidence and accuracy
- Labour savings (skilled and unskilled)
- Material savings (concrete and void formers etc.)
- Piles are particularly appropriate for heave sites (trees removed) for which they are strongly recommended

Pile Layout

Pile layouts can be readily designed to accommodate an individual plot. A good design will seek to achieve cost savings in foundation excavation and materials by the incorporation of large ground beam spans between piles, and a small number of piles.

A typical pile layout is indicated in diagram 4.11 below

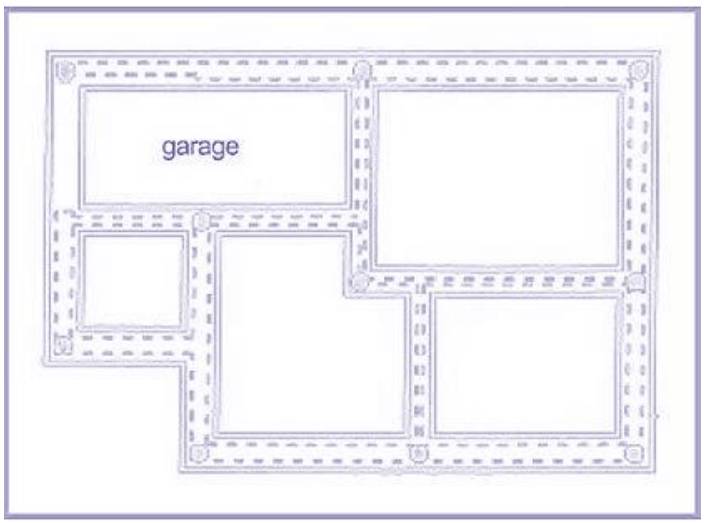

Diagram 4.11: Typical pile layout

Floor Construction

- Suspended floors with provision for adequate ventilation
- Beam and block may be better than timber flooring to accommodate large spans designed for economies

GROUND BEAMS

- Precast RC beams can be installed and over-excavation beneath the beam undertaken to accommodate any potential heave – use of precast beam may be beneficial in difficult ground conditions
- Cast in-situ beams will require provision of void formers and a minimum cover to reinforcement (i.e. 75mm when cast in the ground with no shuttering)

Typical Pile Design

Pile foundations should be designed by an Expert (fully insured building professional) and include the following criteria (See diagram 4.12):

- Design to length for bored piles (or set for driven piles where these are recommended following ground investigations)
- Precautions to resist uplift
- Provision of sleeving to top section
- Preference is for installing longer piles designed to balance uplift
- Tension reinforcement required

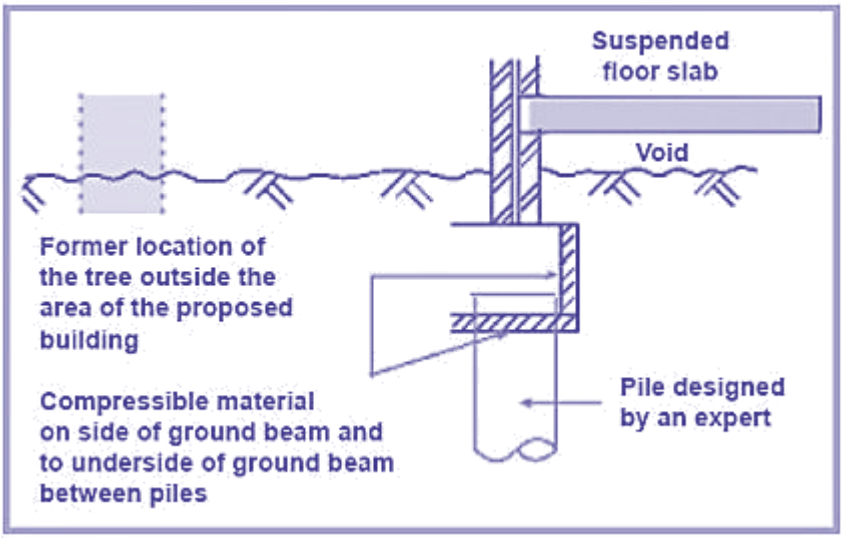

Diagram 4.12: Typical pile beam design for heave conditions

PROXIMITY OF TREES IN CLAY SOILS

Introduction

The methods suggested below will be accepted by Build-Zone as meeting the requirements. Builders and designers should note that other equally acceptable solutions may exist.

These details provide guidance relating to precautions which should be undertaken in shrinkable clay soils, particularly where trees are present or have been felled. The following relates to conventional strip or trench fill foundations, although general comments are given on the potential benefits of other foundations in shrinkable clay soils.

Additional guidance on foundations in swelling and shrinkable clays is available in:

BS EN 1997-1:2004 Code of Practice for Foundations together with aspects of design and construction
BS 5837: 2005 Guide for trees in relation to construction

These guidelines are written with a view to indicating good practice for a typical combination of conditions. However, each site has its own specific characteristics and where conditions do not clearly fall within the guidance given, seek clarification from Build-Zone or a suitably qualified and experienced Expert.

Identification and Classification of Clay Soils

DAMAGING EFFECT OF CLAY

Changes in moisture contents of clays can cause heave or shrinkage which, in turn, can cause cracking and movement of foundations, floor slabs and hence whole structures. Clay shrinkage is caused during dry spells generally from moisture abstraction by vegetation, whereas clay heave is often caused by the removal of trees and hedgerows or alternatively due to substantial wetting after prolonged dry spells. The extent of movement may be determined from a number of factors, e.g. clay type, vegetation and tree type, the distance from the foundation excavation to the tree and / or geographical location.

The effects of clay shrinkage and clay heave on structures can be seen in diagrams 4.13 and 4.14.

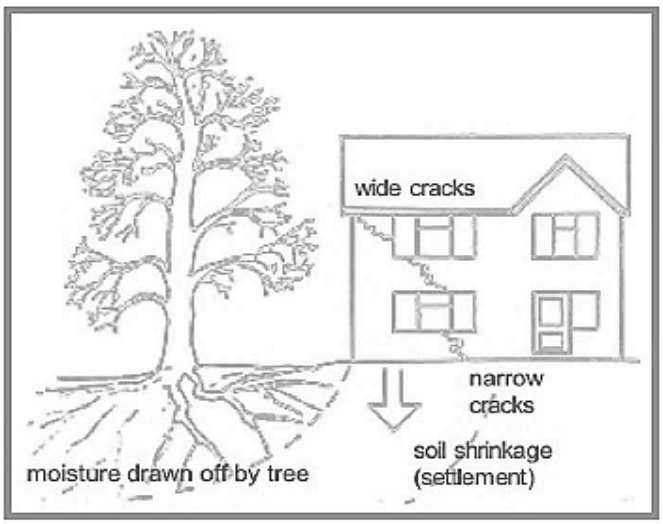

Diagram 4.13: Damaging effect of clay shrinkage

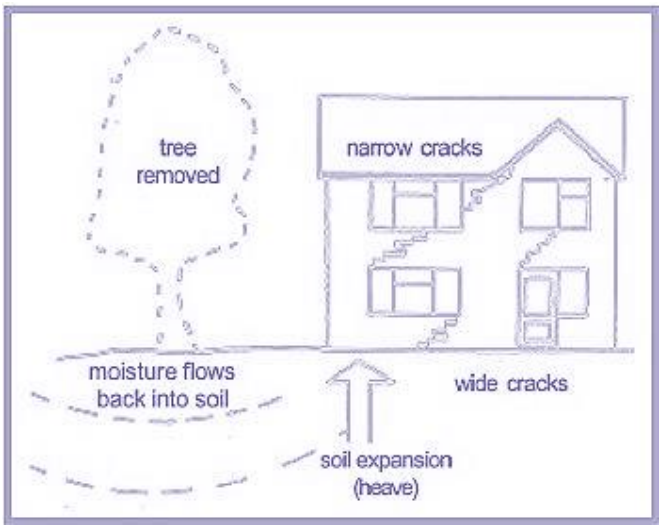

Diagram 4.14: Damaging effect of clay heave

Climatic Effects

Different climatic effects for different parts of the country influence the degree to which shrinkable clays cause movement of foundations. This is generally thought of in terms of soil moisture deficit. Locations in the south east of England have a relatively warmer and drier climate than the rest of the British Isles, hence have corresponding higher soil moisture deficit values; locations in the north have a colder and wetter climate with lower soil moisture deficit values

LOCATION OF SHRINKABLE CLAY SOILS

Clay soils may be found nationwide. All are shrinkable to varying degrees, although clays of most concern are found within an area south east of a line drawn between Exeter and Hull (See diagram 4.15).

Clays situated south east of this line are likely to be classified as medium to highly shrinkable, with those to the north west of this line in general having a medium to low shrinkability potential.

Guidance on the probable soil conditions in a locality can be obtained from geological survey maps, available from British Geological Survey (maps may be available for inspection at local libraries and from the local Building Control Authority).

Local variations are common and additional guidance should be sought by undertaking ground investigations. The interaction of trees and clay soils should also be borne in mind when considering appropriate ground investigations.

All clays require an assessment of shrinkage to be made to assist in foundation design. The most accurate way of achieving this is via a soil sample analysis in a laboratory.

SITE IDENTIFICATION OF CLAY TYPES

A clay can be recognised as being smooth and silky to touch with no grains visible to the naked eye. A clay may also contain silt sized particles (barely visible to the naked eye) together with sand (which will be visible and would give a more gritty feel to the touch).

The shrinkage potential of clay soils may be classified according to their plasticity. In general, the finer the soil (more clay particles and less silt or sand sized particles) the greater its shrinkage potential.
In order to accurately determine the shrinkability of clay soils, laboratory tests need to be carried out, such tests comprising a determination of:

- the natural moisture content;
- the liquid limit
- the plastic limit
- the plasticity index (PI)

Tests should be undertaken in accordance BS 1377 – Methods of test for soils for civil engineering purposes.

Although recommended, laboratory tests are not always necessary and insitu bore testing can be undertaken. Where local knowledge is available regarding the soil type or from visual inspection (the soil has a high sand and or stone content) it may be evident that the clay type would not fall within the category of high shrinkability.

Where the soil type cannot be readily identified and in the absence of either laboratory or insitu bore hole testing a high shrinkage potential should be assumed.

SHRINKAGE CLASSIFICATION

Soils which have a large potential range of moisture content within which the clay remains plastic (i.e. has a high plasticity index percentage) are more susceptible to shrinkage and swelling than those soils with a low PI.

There are no precise limits for PI which correspond to an amount of shrinkage. However, it is conventional practice to classify shrinkage potential (or swelling potential) with PI values. A commonly adopted classification is as follows:

Plasticity Index value %	Shrinkage Potential
>40%	High
20%-40%	Medium
0%-20%	Low

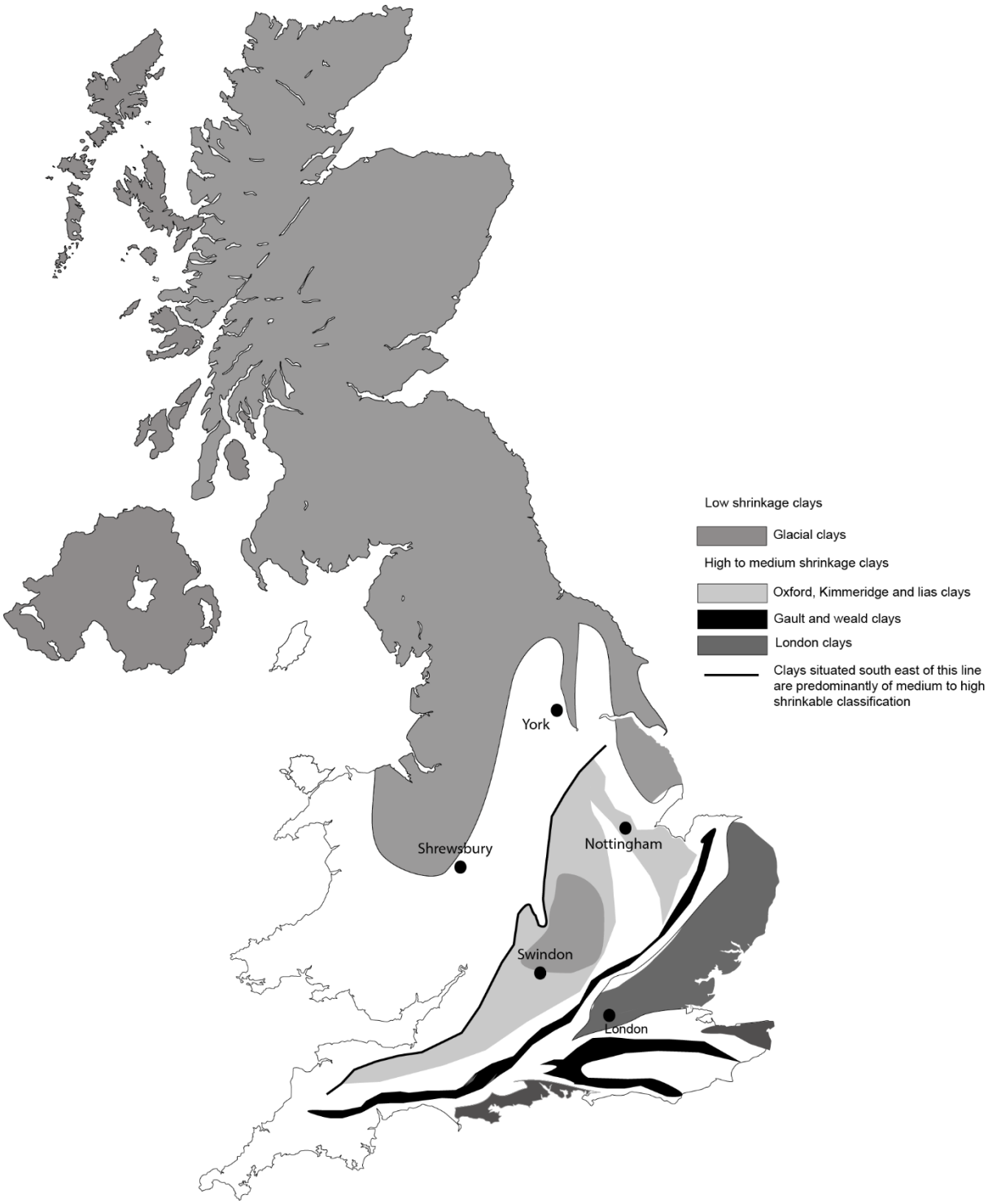

Table 4.15: A guide to the location of shrinkable clays

Assessing Likely Water Demand of Trees

High water demand		Moderate water demand		Low water demand	
Tree type	Mature height (m)	Tree type	Mature height (m)	Tree type	Mature height (m)
Elm English	24-30	Alder	18-22	Birch	15-25
Elm Wheatly	24-30	Apple	8-10	Elder	8-10
Elm Wych	24-30	Ash	22-30	Fig	3-4
Eucalyptus	24-30	Bay Laurel	22-30	Hazel	10-12
Hawthorn	9-15	Beech	22-30	Hornbeam	16-20
Oak English	20-25	Blackthorn	8-15	Holly	10-12
Oak Holm	20-25	Cedar	20-30	Holly	12-20
		Corsican Pine	20-30	Honey Locust	8-12
Oak Red	20-25	Cherry Domestic	14-16	Hornbeam	16-20
Oak Turkey	20-25	Cherry Japanese	14-16	Laburnum	16-20
Poplar Aspen	20-25	Cherry Laurel	8-15	Magnolia	8-12
Poplar Hybrid Black	20-25	Cherry Wild	16-25	Mulberry	12-14
Poplar Lombardy	20-25	Douglas Fir	20-30	Tulip Tree	12-14
Poplar White	20-25	False Acacia	16-25		
Willow Crack	20-25	Horse Chestnut	16-25		
Willow Weeping	20-25	Judas Tree	7-10		
Willow White	20-25	Larch	20-30		
Cypress Lawson	18-30	Laurel	12-14		
Cypress Leyland	18-30	Lime	12-14		
Cypress Monterey	18-30	Maple Japanese	8-12		
		Maple Norway	20-26		
		Monkey Puzzle	20-30		
		Mountain Ash	20-26		
		Pear	20-26		
		Plane	20-26		
		Plum	20-26		
		Scots Pine	20-30		
		Spruce	20-30		
		Sweet Chestnut	20-26		
		Sycamore	20-26		
		Tree of Heaven	20-26		
		Walnut	20-26		
		Western Hemlock	20-30		
		Yew	20-30		

Table 4.17: Mature heights of conifer trees and moisture demand

Notes:

In the majority of urban area developments the lower of the two mature heights specified can be adopted in determining the recommended depth of foundation required. (H within the D/H ratio, refer to tables 4.19, 4.20, 4.21 and 4.22).

The presence of trees and other vegetation affects the moisture content considerably. Careful assessment of the trees in close proximity to the proposed dwelling, together with the moisture demand on the clay is therefore essential. As a general guide, buildings constructed nearer to existing trees than a distance equal to their mature height – the so called '1H' rule will be influenced by the moisture demand of that tree. Where applied the '1H' rule should reduce the risk to the foundations but should not be regarded as an all-encompassing rule of safety. Builders and designers should follow the guidance given in this Manual and use the information together with the tables provided, to determine the actual depth of foundations relative to the tree type and location.

The degree to which a soil will change in volume will depend greatly on the amount of moisture which is drawn from or returned to it. Different trees have different water demands, and it is important to determine the particular tree type under consideration (See diagram 4.18).

It is important to consider and identify trees on adjacent sites, where the soil type has a shrinkable potential. Some trees up to 30m away from the proposed dwelling may still abstract moisture from the soil at the dwelling's location.

TREE IDENTIFICATION

Trees may be identified using the tree leaf pictures shown in diagram 4.18. If in doubt, consult a suitably qualified Expert.

Horse Chestnut (Aesculus)

Ash (Fraxinus excelsior)

Sycamore - Acer pseudoplatanus

Oak

Alder – (Alnus glutinosa)

Aspen (Populus tremula)

Beech – (Fagus sylvatica)

Elder (Samucus niger)

Hazel (Corylus avellana)

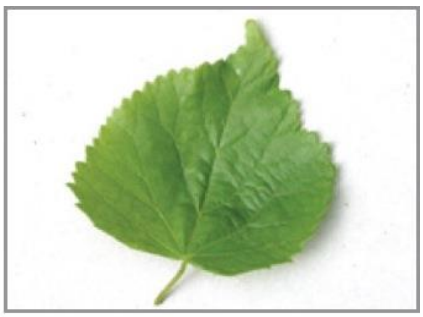

Lime (Tilia cordata)

Mountain Ash – (Sorbus aucuparia)

Sweet Chestnut (Castanea sativa)

Diagram 4.18: Tree leaves

For further information:

Arboricultural Association
01794 368717 www.trees.org.uk

Arboricultural Advisory and Information Service
01420 22022

Tree Helpline 01242 522152 (premium rates charged)
www.trees.org.uk

MATURE HEIGHTS AND WATER DEMAND

Details of typical mature heights and water demands, for the most commonly found trees within the British Isles are included in table 4.19.

Distance between the structure and the tree:

When considering the factors in relation to a tree's proximity, the shrinkage effect of the clay soil is not the only consideration. The physical size of a tree can dominate a building and give rise to concern about the tree's safety. BS EN 1997-1:2004 gives guidance on the proximity of trees to structures to assist in the planning of developments.

In particular, the British Standard gives specific guidance on minimum distances to avoid damage to the root system and direct damage to a structure from the future growth of the trunk and roots. Guidance should be sought from a suitably qualified Expert where a structure is proposed within a distance from the tree equal to one tenth of the mature height (i.e. within D/H = 0. 1).

The British Standard also gives general guidance on the depth of foundations based on clay soils, however, more specific guidance is provided in the following pages.

Foundation Depths in Clay Soil

NO TREES PRESENT

The minimum depth for a foundation on a clay soil, where no trees are present or have been removed within the last three years, is:

- 0.9m (900m) for low to medium volume change potential soils (PI value of 0-40%) and
- 1.0m (1000mm) for high volume change potential soils (PI value > 40%), or
- in accordance with the Building Control Policy whichever is the greater

This minimum depth is required to ensure that the natural climatic affects i.e. drying and frost, do not affect the stability of the proposed foundation.

The results of the site investigation report must confirm that no desiccation is evident.

TREES PRESENT

Guidance on minimum depths of foundations for different clay soils and different moisture demands is presented in tabular form in tables 4.20 -4.22.

Attention is drawn to the fact that mature tree heights need to be applied when using these tables, rather than the actual height (unless the tree is being removed before construction commences) at the time of construction.

If any factors are unknown or unable to be established at the time of construction, the worst case scenario should be assumed i.e. a high shrinkability soil together with a high water demand broad leaf tree type.

TREES REMOVED

Where trees have been removed from clay soils the moisture extracted previously by the tree will eventually find its way back into the soil, resulting in the soil swelling. This is commonly known as rehydration or a “recovery” of the soil.

The greater the depth below ground level the less moisture is abstracted from the soil by the tree and hence the less likelihood of structural damage occurring to the foundation.
Predicting a safe depth at which to construct the foundations, where the moisture content can be considered relatively stable in shrinkable clay soils near trees, requires account to be taken of a number of major factors. Such factors are:

- Soil type
- Shrinkage potential of the clay soil
- Potential water demand of the tree
- Potential mature height of the tree
- The influence of removed trees
- Distance of the tree(s) from the proposed foundation (measured on site in metres)
- Climatic factors (geographical location)

All of the above considerations are dealt with in detail within the text, except the actual distance of the tree from the proposed foundation, which will be determined from accurate measurement on site. The use of root barriers is not an acceptable alternative to this guidance and will not be accepted as a design parameter by Build-Zone.

Choosing the Foundation Type

Conventional strip foundations may be constructed practically and economically to a maximum depth of approximately 1.5m, hence where trees are present on clay soil sites, strip foundations would be unsuitable in the majority of cases.

Trench fill foundations are likely to be most economic for low and moderate moisture demand trees. This type of foundation is best suited at depths below 1.5m and can be economical to depths of 2.5-3.0m. Trench fill foundations exceeding 3m should have expert design input, and should consider slip membranes and heave precautions. Depths below 3m can have Health and Safety implications which should also be considered.

For foundation depths in excess of 2.0m, short bored piles with ground beams are suggested and may well prove to be a more economical form of construction. Short bored piles are an essential requirement for depths in excess of 3.0m.

The use of root barriers is not an acceptable alternative to this guidance and will not be accepted by Build-Zone.

All pile design should be undertaken by an Expert e.g a fully insured and competent Structural Engineer or other appropriately insured Building Professional. This may well be the supplier and installer.

Note:

- If a tree cannot be readily identified, then assume the tree has a HIGH MOISTURE DEMAND for a BROADLEAF tree.
- If the volume change potential of the soil cannot be confirmed then assume a HIGH PI of >40%.

For trees removed within the footprint of the proposed dwelling/structure, see precautions against heave as detailed within this document.

STEP BY STEP GUIDE

1. Identify the tree type from site observation and reference to diagrams 4.18 or other suitable reference data.
2. Note the anticipated mature height (H), the tree's moisture demand and its category i.e. broad leaf or coniferous.
3. Measure the actual distance (D) on site from the tree trunk to the external face of the proposed foundation.
4. Calculate the D/H ratio, using a calculator or by reference to table 4.19: Actual Distance (D) Mature Height (H)
5. Establish the shrinkage potential of the soil, either from local or expert knowledge, laboratory tests or by assuming the safeguard of a high Plasticity Index (PI).
6. Using the appropriate table 4.20-4.22 for high, moderate or low moisture demand for the tree(s) in question, and using the D/H and PI established earlier, read off the proposed foundation depth.
7. Apply a reduction factor (where applicable) in foundation depth for geographical location see diagram 4.23.
8. Depending upon the established depth required, determine the most suitable foundation type for the structure.

Please note the above is included as a guide only and advice should be sought from a fully insured and qualified Building Professional and where appropriate an Arboriculturalist.

Mature height (H) of the tree (metres)	Distance (D) away from foundations (metres)																	
	2	4	6	8	10	12	14	16	18	20	22	24	26	28	30	32	34	36
30	0.07	0.13	0.20	0.27	0.33	0.49	0.47	0.53	0.60	0.67	0.73	0.80	0.87	0.93	1.00	1.07	1.13	1.20
29	0.07	0.14	0.21	0.28	0.34	0.41	0.48	0.55	0.62	0.69	0.75	0.83	0.90	0.97	1.03	1.10	1.17	1.24
28	0.07	0.14	0.21	0.29	0.36	0.43	0.50	0.57	0.64	0.71	0.79	0.86	0.93	1.00	1.07	1.14	1.21	1.29
27	0.07	0.15	0.22	0.30	0.37	0.44	0.52	0.59	0.67	0.74	0.81	0.89	0.96	1.04	1.11	1.19	1.26	1.33
26	0.08	0.15	0.23	0.31	0.38	0.45	0.54	0.62	0.69	0.77	0.85	0.92	1.00	1.08	1.15	1.23	1.31	1.38
25	0.08	0.16	0.24	0.32	0.40	0.46	0.56	0.64	0.72	0.80	0.88	0.96	1.04	1.12	1.20	1.28	1.36	1.44
24	0.08	0.17	0.25	0.33	0.42	0.50	0.58	0.67	0.75	0.83	0.92	1.00	1.08	1.17	1.25	1.33	1.42	1.50
23	0.09	0.17	0.26	0.35	0.43	0.52	0.61	0.70	0.78	0.87	0.96	1.04	1.13	1.22	1.30	1.39	1.48	1.57
22	0.09	0.18	0.27	0.36	0.45	0.56	0.64	0.73	0.82	0.91	1.00	1.09	1.18	1.27	1.36	1.45	1.55	1.64
21	0.10	0.19	0.29	0.38	0.48	0.57	0.67	0.76	0.86	0.95	1.05	1.14	1.24	1.33	1.43	1.52	1.62	1.71
20	0.10	0.20	0.30	0.40	0.50	0.60	0.70	0.80	0.90	1.00	1.10	1.20	1.30	1.40	1.50	1.60	1.70	1.80
19	0.11	0.21	0.32	0.42	0.53	0.63	0.74	0.84	0.95	1.05	1.16	1.26	1.37	1.47	1.58	1.68	1.79	1.89
18	0.11	0.22	0.33	0.44	0.56	0.67	0.75	0.89	1.00	1.11	1.22	1.33	1.44	1.56	1.67	1.78	1.89	2.00
17	0.12	0.24	0.35	0.47	0.59	0.71	0.82	0.94	1.06	1.18	1.29	1.41	1.53	1.65	1.76	1.58	2.00	
16	0.13	0.25	0.38	0.50	0.63	0.75	0.88	1.00	1.13	1.25	1.38	1.50	1.63	1.75	1.88	2.00		
15	0.13	0.27	0.40	0.53	0.67	0.80	0.93	1.07	1.20	1.33	1.47	1.60	1.73	1.87	2.00			
14	0.14	0.39	0.43	0.57	0.71	0.85	1.00	1.14	1.29	1.43	1.57	1.71	1.86	2.00				
13	0.15	0.31	0.46	0.62	0.77	0.92	1.08	1.23	1.38	1.54	1.69	1.85	2.00					
12	0.17	0.33	0.50	0.67	0.83	1.00	1.17	1.33	1.50	1.67	1.83	2.00						
11	0.18	0.36	0.55	0.73	0.91	1.09	1.27	1.45	1.64	1.82	2.00							
10	0.20	0.40	0.60	0.80	1.00	1.20	1.40	1.69	1.80	2.00								
9	0.22	0.44	0.67	0.89	1.11	1.33	1.56	1.78	2.00									
8	0.25	0.50	0.75	1.00	1.25	1.50	1.75	2.00										
7	0.29	0.57	0.86	1.14	1.43	1.71	2.00											
6	0.33	0.67	1.00	1.33	1.67	2.00												
5	0.40	0.80	1.20	1.60	2.00													

Table 4.19: Calculation of D/H ratio

Notes:

1. For D/H between stated values foundations depths may be determined by interpolation.
2. A reduction in foundation depth may be applied based on climatic factors (see diagram 4.23).
3. Data is for single trees.
4. Where trees have been removed, refer to table 4.24.
5. Foundations may need protection using compressible material even where trees are not removed (see tables 4.27 and 4.28).

Trees with low moisture demand																									
Shrinkage potential of clay	PI %	Tree type	<0.1	0.10	0.20	0.25	0.30	0.35	0.40	0.45	0.50	0.55	0.60	0.65	0.70	0.75	0.80	0.85	0.90	0.95	1.0	1.05	1.10	1.15	>1.2
high	>40	broadleaf	NR	3.00	3.00	3.00	3.00	2.90	2.75	2.65	2.50	2.40	2.30	2.15	2.05	1.95	1.90	1.80	1.70	1.55	1.40	1.30	1.20	1.05	0.90
		coniferous	NR	2.80	2.80	2.50	2.25	2.00	1.80	1.60	1.35	1.15	0.90	0.90	0.90	0.90	0.90	0.90	0.90	0.90	0.90	0.90	0.90	0.90	0.90
medium	20-40	broadleaf	NR	2.60	2.60	2.60	2.60	2.45	2.30	2.15	2.00	1.95	1.85	1.80	1.70	1.65	1.55	1.50	1.40	1.30	1.20	1.15	1.10	1.00	0.90
		coniferous	NR	2.40	2.40	2.20	2.00	1.80	1.60	1.45	1.30	1.10	0.90	0.90	0.90	0.90	0.90	0.90	0.90	0.90	0.90	0.90	0.90	0.90	0.90
low	<20	broadleaf	NR	2.30	2.30	2.30	2.30	2.05	1.90	1.65	1.50	1.45	1.40	1.38	1.35	1.30	1.25	1.20	1.15	1.10	1.05	1.00	0.95	0.90	0.90
		coniferous	NR	2.00	2.00	1.85	1.70	1.60	1.45	1.35	1.20	1.05	0.90	0.90	0.90	0.90	0.90	0.90	0.90	0.90	0.90	0.90	0.90	0.90	0.90
Foundation depth(m) below GL where trees are present																									

Table 4.20:High moisture demand

Trees with low moisture demand																									
Shrinkage potential of clay	PI %	Tree type	<0.1	0.10	0.20	0.25	0.30	0.35	0.40	0.45	0.50	0.55	0.60	0.65	0.70	0.75	0.80	0.85	0.90	0.95	1.0	1.05	1.10	1.15	>1.2
high	>40	broadleaf	NR	2.00	2.00	2.00	2.00	1.85	1.70	1.55	1.45	1.35	1.20	1.05	1.00										
		coniferous	NR	1.75	1.75	1.45	1.20	1.00	1.00	1.00	1.00	1.0	1.00	1.00	1.00										
medium	20-40	broadleaf	NR	1.60	1.60	1.60	1.60	1.55	1.45	1.40	1.30	1.20	1.10	1.00	0.90										
		coniferous	NR	1.45	1.45	1.25	1.10	0.90	0.90	0.90	0.90	0.90	0.90	0.90	0.90										
low	<20	broadleaf	NR	1.30	1.30	1.30	1.30	1.25	1.20	1.15	1.10	1.05	1.00	0.95	0.90										
		coniferous	NR	1.20	1.20	1.10	1.00	0.90	0.90	0.90	0.90	0.90	0.90	0.90	0.90										
Foundation depth(m) below GL where trees are present																									

Minimum foundation depths are:
900mm for low to medium volume change potential soils (PI value of 0-40%) and 1000mm for high volume change potential soils (PI value >40%) or in accordance with the Building Control policy whichever is greater.

Table 4.21:Moderate moisture demand

Trees with low moisture demand																									
Shrinkage potential of clay	PI %	Tree type	<0.1	0.10	0.20	0.25	0.30	0.35	0.40	0.45	0.50	0.55	0.60	0.65	0.70	0.75	0.80	0.85	0.90	0.95	1.0	1.05	1.10	1.15	>1.2
high	>40	broadleaf coniferous	NR	1.40	1.40	1.40	1.00	1.32	1.24	1.16	1.08	1.00	1.00												
medium	20-40	broadleaf coniferous	NR	1.20	1.20	1.20	1.20	1.15	1.10	1.05	1.00	0.95	0.90												
low	<20	broadleaf coniferous	NR	1.00	1.00	1.00	1.00	0.98	0.96	0.94	0.92	0.91	0.90												
Foundation depth(m) below GL where trees are present																									

Minimum foundation depths are:
900mm for low to medium volume change potential soils (PI value of 0-40%) and 1000mm for high volume change potential soils (PI value >40%) or in accordance with the Building Control policy whichever is greater.

Table 4.22: Low moisture demand

Key to tables 4.20, 4.21, 4.22	
NR = Not Recommended (to provide protection to the tree)	
<= Less then	
>= More than	
	Any foundation greater than 2.5m require design by a suitably qualified and experienced expert
	Short bored piles are recommended for depths greater than 2.0m
	Short pored piles are a requirements for depths greater than 3.0m

Note: The minimum foundation depth for a foundation on a clay soil, where no trees are present or have been removed within three years is:

- 0.9m (900mm) for low to medium volume change potential soils (PI value of 0-40%) and
- 1.0m (1000mm for high volume change potential soils (PI value > 40%) or
- in accordance with the Building Control Policy whichever is the greater.

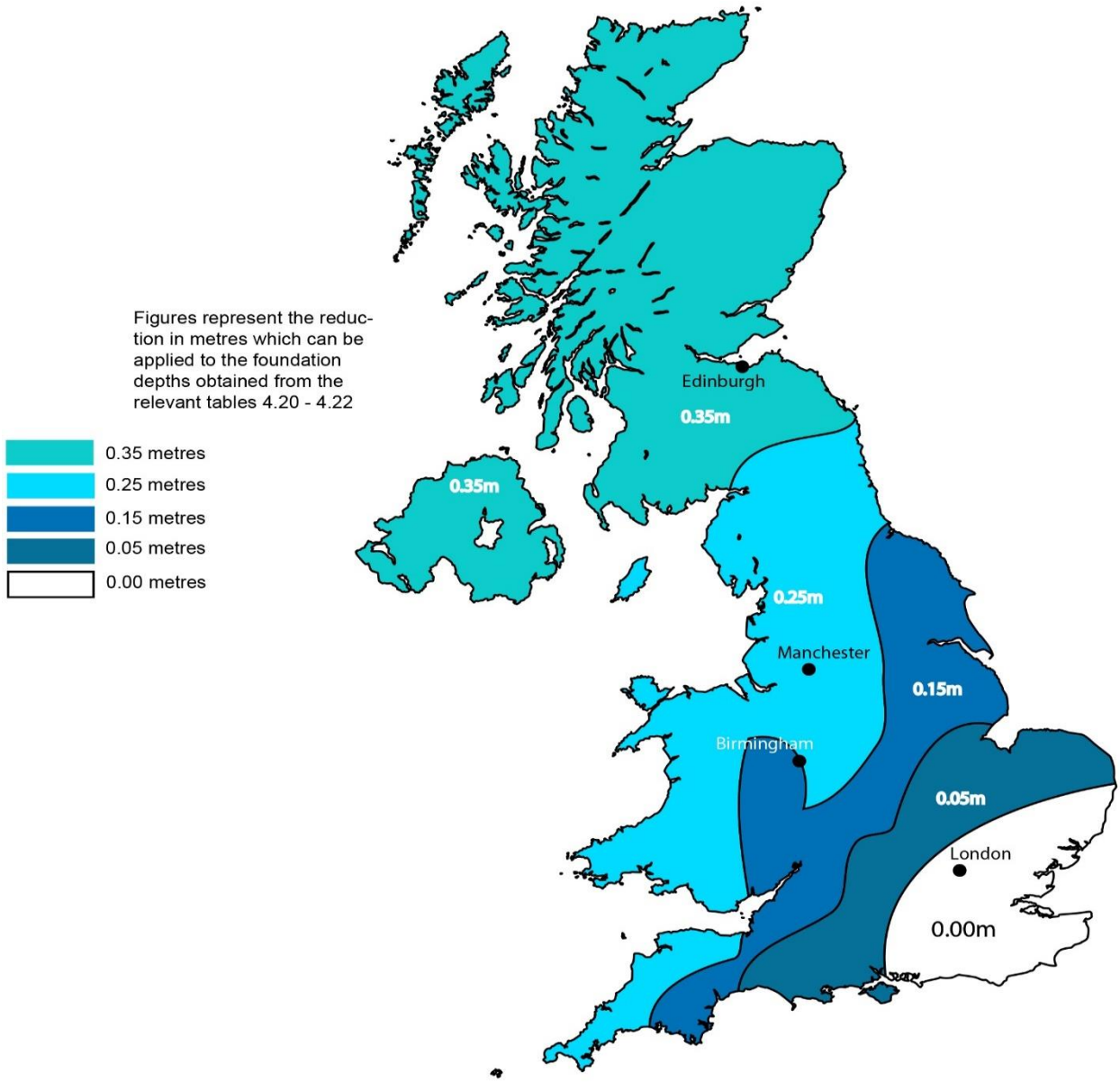

Diagram 4.23: Reduction in foundation depths

Building Over the Former Location of Trees

Where buildings are proposed directly over the former location of trees it may be prudent to consult a suitably experienced and qualified Expert. However, the recommended minimum depth of foundation excavation where mature trees have been removed within the building's footprint are set out in table 4.24.

Tree type to be removed	Shrinkage potential	Minimum foundation depth broadleaf/conifer
high moisture demand	high	3.0 / 2.8m
	medium	2.6m / 2.4m
	low	2.3m / 2.0m
moderate moisture demand	high	2.0m / 1.8m
	Medium	1.6m / 1.5m
	low	1.3m / 1.2m
low moisture demand	high	1.4m
	Medium	1.2m
	low	1.0m
1. For young trees, the recommended depths are the same unless otherwise assessed by a suitably qualified Expert 2. In these circumstances it is strongly recommended to use short bored piles, adequately designed by an expert to resist heave		

Table 4.24: Foundation depths when building over the former location of trees

NOTE: If, when excavating to the recommended foundation depths, vegetation / fibrous roots are still being encountered, then the foundation depth shall be increased to 500mm below the level of the existing roots. This is a key requirement of the Technical Audit. The need for heave precautions should also be considered by the Designer.

Heave Precautions

Not only do the foundations have to penetrate to a depth which is outside the influence of the tree(s) and therefore soil movement, additional precautions need to be provided to the face of the foundations and the underside of ground beams and floor slabs.

Compressible materials such as low density expanded polystyrene (or proprietary heave systems) may need to be provided to the face of foundation excavations prior to the concrete being placed (See diagrams 4.25 and 4.26). Voids or proprietary void formers may be required to the perimeter of ground beams and the underside of floor slabs (See table 4.28).
These precautions are essential where the clay soil is susceptible to heave (whether trees remain or are removed).

COMPRESSIBLE MATERIALS/VOID FORMERS

The materials used for void formers (either compressible boards or proprietary systems) should be those assessed and possessing independent Third Party Certification acceptable to BZSS's appointed Technical Auditor and should be installed in accordance with the manufacturer's instructions.

In the majority of cases where trees are removed outside the footprint of the proposed dwelling, compressible boards need only be used on the internal face of the foundation. For trees removed from within the proposed building area, compressible material (in accordance with table 4.27) will be required to both faces of external foundation trenches. If in doubt regarding a particular site or precautions required consult a suitably qualified Expert or Build-Zone.

Note: Fast construction of the building to Wind and weather tight with the inclusion of a full external drainage system after tree removal is desirable to avoid clay heave due to the ingress of moisture from rainfall, prior to the superstructure loads being applied. Damage to either strip or trench filled foundations can occur at this early stage, where moisture ingress is allowed to occur.

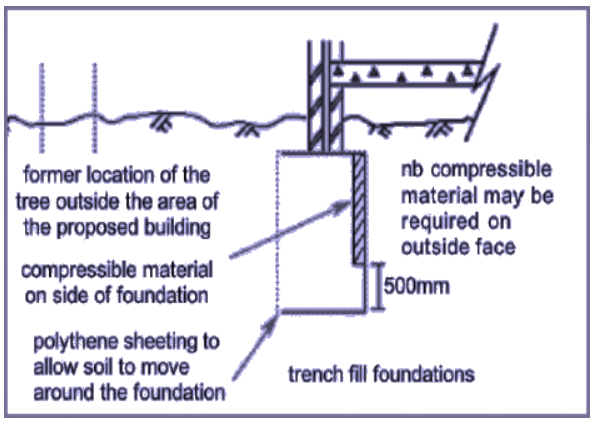

Diagram 4.25: heave precautions where a tree is removed outside the footprint of the proposed dwelling

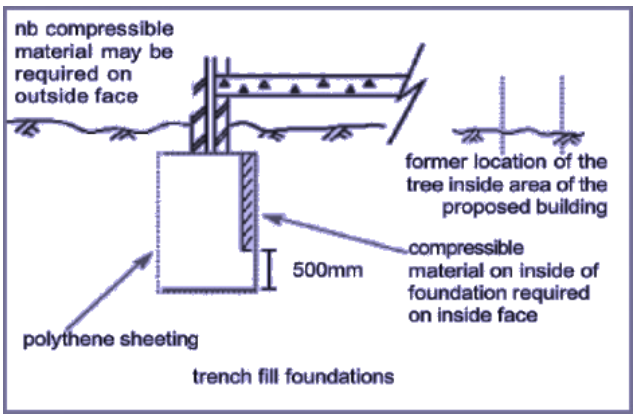

Diagram 4.26: heave precaution where a tree is removed within the footprint of the proposed dwelling

External walls			Internal walls
Existing trees	Outside faces	Inside faces	Both faces
Where D>2d	X	✓	X
Where D<2d	✓	✓	X
Remove trees	Outside faces	Inside faces	Both faces
Where D>2d	X	✓	X
Where D<2D	✓	✓	X
Trees in building area	✓	✓	X
1. Compressible material is required to counter any out of balance forces resulting from swelling (see table 4.28)			
2. where a tree (or tree removed) is (was) present/very close or beneath the house, compressible materials are required on both faces.			
3. > = more than < = equal to or less than 2d = 2 times foundation depth D = distance from tree to foundation face			

Table 4.27: Guidance for location of compressible material

element	Void former/void	Soil heave potential (dimensions in mm)		
		high	medium	low
Underside of ground beam	Void former	150-200	100-150	50-100
Underside of insitu floor slab	Void former	150-200	100-150	50-100
Against side of foundation	Void former	35-50	25-40	0-25
Pre-cast concrete floor (beam & block)	Void	225-250	175-200	125-150
Timber suspended floor	void	300-350	250-300	200-250
In the majority of cases the lower limits will be acceptable for each soil type				

Table 4.28: Minimum void dimensions to facilitate heave against foundations, ground beams and floors

Aspects Unique to Some Clay Sites

BOUNDARY WALLS

Foundation depths for dwellings apply equally to detached garages and other associated structures, such as brick or concrete boundary walls. On shrinkable clay sites it may be more prudent and possibly more economic to adopt concrete/timber post together with a timber fencing system (subject to planning constraints).

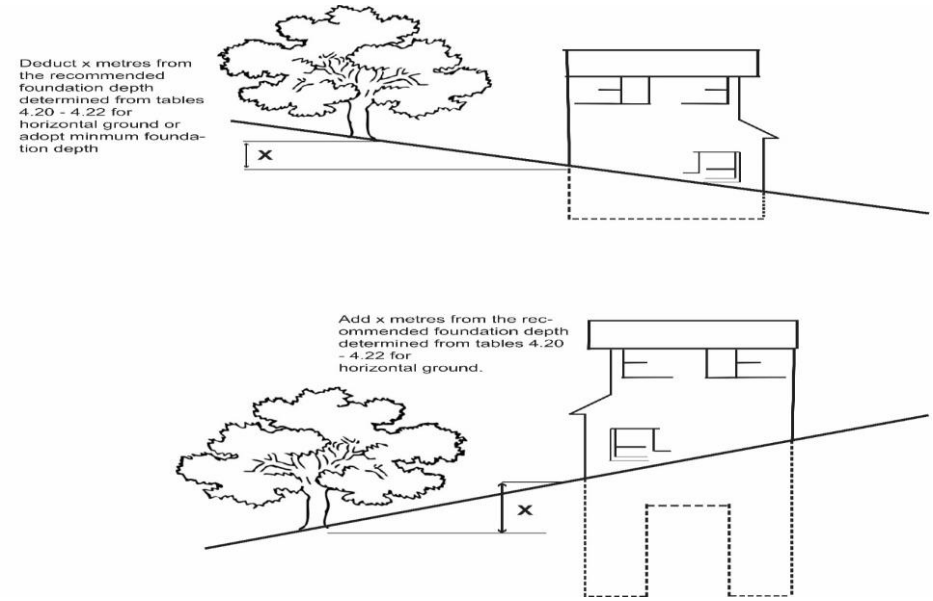

Diagram 4.29: Allowance for sloping ground 1

It is not uncommon for a sand and gravel formation to overlie a shrinkable clay, in which case a site investigation is required to determine the extent of the overlying material. An assessment of the type and depth of foundation proposed should be made by a suitably experienced and qualified Expert. For general guidance in these circumstances see diagram 4.31.

The thickness (d1) of the non-shrinkable soil beneath the foundation should be greater than the width of the proposed foundation (W), and the depth (d2) to the base of that overlying material should be greater than 0.8 times the depth of the foundation assuming it was to be excavated in a clay soil (d3) (depth established from tables 4.20 - 4.22 for clay soils).

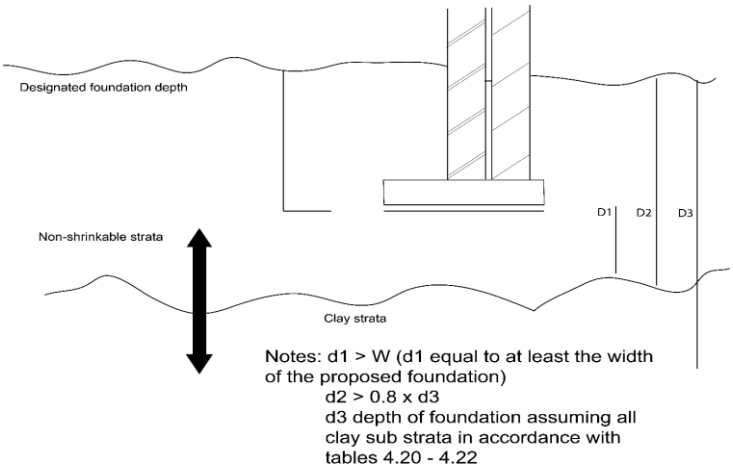

Diagram 4.31: Non-shrinkable soils over shrinkable clays

4.6 Drainage

FOUL AND STORM (SURFACE) WATER DRAINAGE:

Every drainage system should be designed and constructed in accordance with the guidance contained in the appropriate document below:

England & Wales – Approved Document H – Drainage and waste disposal
Scotland – Technical Standards Section 3 – Environment
Northern Ireland – Part N – Drainage
Ireland – Technical Guidance Part H Drainage and Waste Disposal

Additional guidance is also provided in the following current design and construction standards:

BS EN 12056-2:2000 - Sanitary pipework
BS EN 12056-3 - Drainage of roofs and paved areas
BS 6297:2007 - Design and installation of small sewage works
BS EN 752:2008 - Building drainage

The relevant Building Control Body and BZSS's appointed Technical Auditor should approve the construction of and test by approved methods the drainage system. In the absence of an inspection and / or final test by the Building Control Body, Build-Zone will need to be consulted and this may lead to exclusion from the Warranty.

The following clauses provide guidance on the interpretation of the Build-Zone requirements with regard to individual elements covered in this Manual and where appropriate, propose guidance on ways to meet these requirements.

Drainage – General

Where impervious surfaces such as drives, paths, hard-standings, etc. drain to a rainwater drainage system, a trapped gully should be provided. Impervious surfaces may drain to a permeable area of the garden provided that it is free draining.

Proprietary drainage systems should be designed and laid in accordance with the manufacturer's specification.

The drainage system, including manholes, gullies, pipe connections, etc. should be protected from damage throughout the course of the construction works.

Prior to handover, the drainage system should be rodded clean and its efficient operation checked.

Workmanship should comply with BS 8000-14:1989.

Rainwater should discharge into a rainwater drainage system, or a soakaway located at least 5.0m from any building or watercourse. The soakaway should have a minimum capacity of $1m^3$. For soakaway design refer to BRE Digest 365.

Pipework

Flexible drainage systems should be provided where ground movement is likely to occur, e.g. filled sites, mining areas and sites with shrinkable clay.

Drain runs should, wherever possible, avoid passing adjacent to tree roots. Where this cannot be avoided, adequate precautions should be taken in accordance with the recommendations of the relevant Building Control Body and the pipe manufacturer.

Drainage trench excavations should be taken down to solid ground or where this is not possible, the drainage system should be designed to accommodate any movement and made up with a well compacted backfill to the required formation levels. Quality of backfill should be in accordance with the manufacturer's recommendations.

The depth of drains and the protection provided over the drain should be adapted to the traffic normal for the location in accordance with the recommendations of the relevant Building Control body and the pipe manufacturer.

Pipes should be laid in accordance with the manufacturer's instructions and any independent Third Party certification acceptable to Build-Zone.

Pipes should be securely stored so as to avoid damage. Plastic pipes and fittings should be stored away from direct sunlight and once laid, covered as soon as possible.

Manholes, Access Chambers, Gullies and Rodding Eyes

The cover level of manholes, access chambers, gullies and rodding eyes should suit the adjacent finished ground levels and be provided with covers capable of withstanding the traffic normal for the location.

Covers should be finished level with any adjacent paving or building and bedded so as to accommodate the adjacent finished surface of the ground.

Manholes should be of a suitable size so as to permit access for inspection and maintenance. In sealed systems narrow shaft type accesses should generally not be deeper than 600mm, or be in accordance with the manufacturer's instructions and any independent Third Party certification acceptable to Build-Zone.

Inspection chambers and manholes within buildings should have mechanically fixed airtight covers unless the drain itself has watertight access covers.

Manholes deeper than 1m should have metal step irons or fixed ladders.

Catch pits or silt traps should be provided to all land drainage systems which connect to a drain or sewer.

Quality of Backfilling Under Drives, Garages, Paths, Etc.

Backfill to trenches under drives, garages and paths should be carried out using non-organic matter which should be fully compacted. Where drains have less than 600mm cover they should be protected by either encasing in concrete or by a reinforced concrete raft cast over the drain which may form part of the drive, garage, path, etc. Pipework material may be changed depending on loading and depth but this must be agreed with the Building Control Body and BZSS's appointed Technical Auditor.

Planning Drainage

The design and layout of a drainage system should be kept as simple as possible and be capable of conveying and discharging its contents, without causing nuisance or danger to health and safety from leakage, blockage or surcharge throughout its anticipated lifetime.

There may be technical and economic advantages in providing a drainage system to serve more than one property but such an arrangement may cause difficulties in conveyancing or apportionment of future maintenance costs. Designers should consider this when preparing drainage layouts.

Sewers serving more than 1 property should normally have a minimum diameter of 100mm. For more than 10 dwellings the minimum diameter should be 150mm.

For housing it is preferable for drains to be laid externally where provision can be made for ready detection of blockages and their removal. A drain trench should not impair the stability of a building. When drains are laid parallel to the foundation, care should be taken that the foundations are not undermined.

Written permission is required from the Water and/or Highway Authority before any work in connection with drains is started.

COMBINING FOUL AND SURFACE WATER DRAINAGE SYSTEMS

The relevant Authority's requirements vary but will be either:

- A separate system - separate sewers inclusive of manholes are provided for foul and surface water

OR

- A combined system - both foul and surface water use the same pipeline and manhole system.

In rural areas where no public sewer is readily available, special consent may be given for foul water to be discharged into a cesspool or septic tank and surface water to a soakaway, ditch or natural watercourse or lake.

PROVISION OF ACCESS TO DRAINS

As the majority of drainage is underground it is necessary to provide access to the system to allow rodding and the removal of debris. BS EN 752:2008 and Approved Document H (Technical Standards for Scotland: Section 3, N.I. Part N) detail recommendations for the siting and sizing of access fittings.

Guidance on access to drains includes:

- Every drain length/run should be accessible for maintenance and rodding without the need to enter the building
- Access should be provided at the head of a drain run
- Access should be provided within 22m of every junction with another drain, unless there is an inspection chamber at the junction
- Access should be provided at changes of direction, pipe size or gradient
- Every soil and vent and WC pan connection must discharge into an inspection chamber
- Access should be provided at suitable locations to aid the testing of pipe runs
- Each drain length must be roddable from at least one point.

Tables 4.32 – 4.34 provide guidance on access to drainage.

SPECIAL PROTECTION - RODENT CONTROL

Where the site has been previously developed, the Local Authority should be consulted to decide whether special precautions are necessary for the control of rodents. These measures can include:

- Sealed drainage - secondary access covers to pipework within inspection chambers.
- Intercepting traps - regular maintenance of these will be required to prevent blockages. They should only be installed in chambers where maintenance can be carried out from the surface.
- Rodent barriers fitted within discharge pipes or the drainage system.
- Metal cages on ventilator stack terminals to discourage rodents from exiting the drainage system.
- Fixed metal or plastic gratings to gullies in order to prevent dislodging by rodents.

OTHER REQUIREMENTS

- Pipes should be laid to an even gradient and any change in gradient should be combined with an access point.
- Pipes should be laid in straight lines but may be laid to slight curves if these can be effectively rodded.
- Connections should be to inspection chambers or manholes, but connections to junctions are acceptable if access is provided to clear blockages. In all cases discharge should be in the direction of flow.
- Bends should be positioned in or adjacent to terminal fittings, inspection chambers or manholes and at the foot of discharge stacks. Bends should have as large a radius as practicable.
- The system should be ventilated at or near the head of each main drain to allow free passage of air throughout, the maximum length of any branch serving a single appliance being 6m and for a group of appliances 12m.
- Where appliances are not fitted with integral traps at the point of discharge a trap must be provided using either a trapped gully or low back trap.

To	Access fitting small	Access fitting large	To junction branch	To inspection chamber	To manhole
Start of external drain (from stack or ground floor appliance)	12m	12m	-	22m	45m
Rodding eye	22m	22m	22m	45m	45m
Access fitting small, 150mm x 100mm or 150mmØ	-	-	12m	22m	22m
Access fitting large, 225mm x 100mmØ	-	-	45m	22m	45m
Inspection chamber	22m	45m	22m	45m	45m
Manhole	-	-	-	45m	90m*
*may be up to 200m for man-entry size drains and sewers					

Table 4.32: Maximum spacing between access points

Types of access	Depth to invert (m)	Min internal dimensions (mm)		Min. nominal cover size(mm)		remarks
		rectangular	circular	rectangular	circular	
Access fitting	0.6 or less	(1) 150x100 (2) 225x100	150 225	150x100 225x100	150 same size as access fitting	The depth restriction is imposed because of the limited access afforded by these items
Inspection chamber	0.6 or less 1.2 or less >1.2	225x100 450x450 450x450	190 dia for drains upto 150mm dia 450 450	- min 430x430 max 300x300	190 430 350	The depth restriction is imposed as for the access fitting
Rodding eye			Not less than 100 dia		Same as pipework	
Other requirements: (1) Gradient – pipes should be laid to even gradients and any change in gradient should be combined with an access point (2) Direction – Pipes should be laid in straight lines but may be laid to slight curves if these can be cleated of blockages (3) Junctions – Connections should be inspection chambers or manholes but connections to junctions are acceptable if access is provided to clear blockages. In all cases discharge to be in the direction of flow. (4) Bends – Bends should be positioned in or adjacent to terminal fittings, inspection chambers or manholes and at the foot of the discharge stacks. Bends should have as large radius as practicable.						

Table 4.33: Minimum dimensions for rodding eyes, access fittings, inspection chambers

type	size of largest pipe	min internal dimensions (mm)	diameter (mm)	min clear opening size	diameter
<1.5m deep to soffit of pipe	<150 225 300 >300	750x675 1200x675 1200x750 1800 x (DN+450)	1000 1200 1200 The larger of 1800 or (DN+450)	750x675 1200x675	n/a
<1.5m deep to soffit of pipe	<225 300 375-450 >450	1200x1000 1200x1075 1350x1225 1800x(DN+775	1200 1200 1200 The larger of 1800 or (DN+755)	600x600	600
Notes: (1) larger sizes may be required for manholes on bends or where there are junctions (2) The minimum size of the manhole serving any drain for more than 1 property should be 1200mmx675mmx1200mm diameter (3) Further guidance is available for manhole shafts >3.0m deep					

Table 4.34: Minimum dimensions for manholes

FOUL WATER

Foul water drainage is permitted to discharge to one of the following systems listed in order of priority:

- A public sewer; or where this is not reasonably practicable,
- A private sewer communicating with a public sewer; or where this is not reasonably practicable,
- A septic tank which has an appropriate form of secondary treatment or another wastewater management system; or where that is not reasonably practicable,
- A cesspool

Main Drainage

The drainage system will be deemed to be acceptable to Build-Zone if compliance with Building Regulation requirements re foul (and surface) water drainage is achieved.

TESTING AND INSPECTION

After laying gravity drains and/or private sewers they should be tested, if possible before the drainage trenches are backfilled, to ensure consistent and straight falls and water tightness using a suitable air or water pressure test. Where separate drainage systems are provided, or a combined system installed, all connections within the development should be proven to ensure that they are connected to the correct system. Drain tests where possible should be times to coincide with the pre programmed visits of the Technical Auditor.

If a test is not undertaken in the presence of the Technical Auditor the Developer will be responsible for providing to the Technical Auditor or Build-Zone details of either an air pressure or water test of all new drainage installations.

Septic Tanks

GENERAL DESCRIPTION

- Septic tanks are designed to separate and settle solids which are present in sewage, leaving the resultant liquids to be absorbed in the soil. Dispersal is via a sub-surface looped irrigation system of rigid perforated land drains laid in excavated trenches with gravel fill.
- All septic tank installations must possess independent Third Party certificates acceptable to Build-Zone and/or comply with BS 6297:2007+A1:2008 Design and installation of small sewage treatment works and cesspools.
- Sizing of tank depends on the number of residents served by the development (As an indication see table 4.35).

Number of residents	4	9	13
Capacity in litre	2700	3600	4500
Capacity in gallons	600	800	1000

Table 4.35: Sizing of septic tank

Time taken to fall 250mm	Overall length of run required in metres for capacity tanks					
	2800 litres	3600 litres	4500 litres	6000 litres	7500 litres	9000 litres
Upto 30 mins	15	30	50	80	120	140
Upto 1 hour	30	60	90	150	225	280
Upto 2 hours	60	120	180	300	-	-
Upto 3 hours	90	200	360	-	-	-
For drain runs in excess of 100m the trench may be widened to 1m and the length halved from the above figures.						

Table 4.36: Drain run outfall lengths for septic tanks following porosity tests

DESIGN

The following design considerations should be taken into account:

- Legal requirement to obtain "Consent to Discharge" from the Environment Agency.
- Siting should be no closer than 7m from any habitable parts of the building, preferably downslope.
- The dispersal system should be a minimum of 10m from the nearest watercourse and a minimum of 1m above the local water table.
- Emptying vehicles should have access to within 30m of the tank.
- Prevent leakage and ingress of sub-soil water.
- Have adequate ventilation to comply with the manufacturer's recommendations.
- Dry site - 150mm level base of concrete required (with pea gravel fill).

- Wet site - 200mm layers of hardcore/concrete is required (with concrete back fill). The tank should be filled with water to avoid flotation during installation.
- The drainage system should be lengths of perforated pipe (except for the first 3m) laid to falls of approximately 1 in 200. Do not use corrugated land drain pipework.
- Due consideration of changes in water table levels should be considered for outfall drainage.
- Use 30 - 50mm gravel to surround the pipes. Lay a polythene membrane between any topsoil and gravel to avoid contamination

Soil porosity tests should be carried out in accordance with BS 6297:2007+A1:2008 section 15.3.2. The test involves:

- Excavating a hole 300 x 300mm to a depth of 250mm **BELOW** the proposed invert of the land drain.
- Fill the hole with water up to 250mm deep, allow to drain overnight.
- Refill to a depth of 250mm and note the time taken to drain away. Repeat twice.
- Use table 4.36 to calculate length of outfall drainage for capacity of tank.

A notice should be fixed within the property describing necessary maintenance and occupier's responsibilities.

Cesspools

The following items should be considered when choosing a site for a cesspool:

- The site should have sufficient capacity below the level of the inlet of at least 18,000 litres for 2 users. This size should be increased by 6800 litres for each additional user.
- It should have no openings except for the inlet, access for emptying and ventilation.
- Siting should be no closer than 7m from any habitable parts of the building, preferably downslope.
- Emptying vehicles should have access to within 30m.
- Traffic loadings should be avoided.
- Due to the tendency of cesspits to become buoyant they should be surrounded by concrete.
- Dry sites – can be backfilled with pea gravel with a concrete base.
- Wet sites – should be bedded onto pea gravel, which is laid on a 150mm concrete base. Backfill with concrete should occur with the tank being filled with water to avoid flotation during installation.

A notice should be fixed within the property describing necessary maintenance and occupier's responsibilities.

Sewage Treatment Plants

Systems such as Biotec sewage treatment plants employ a development of the aerobic biological process for the purification of sewage and waste water.

There are 4 stages:

- Initial stage - retention of coarse solids for subsequent breakdown
- Reduction stage - pollutants removed by presenting the sewage to the micro-organisms in the presence of oxygen
- Additional treatment to provide nitrification
- Treated effluent is discharged via the outlet. The discharge should be at least 10m from a watercourse and any habitable building.
-

Prior to installation there is a legal requirement to obtain a "Consent to Discharge" from the Environment Agency.

INSTALLATION

The following should be considered prior to installation:

- Siting should be no closer than 7m from any habitable parts of the building, preferably downslope.
- The tank should be vented.
- If the packaged treatment plant requires power to operate it should be able to adequately function without power for up to 6 hours or have an uninterruptable power supply.
- Periodic emptying to prevent excessive build up of surplus sludge is required. It is therefore recommended that emptying vehicles should have access to within 30m.
- A notice should be fixed within the property describing necessary maintenance and occupier's responsibilities.
- The Installation should be reviewed by and test certificates presented to the Technical Auditor.

Pump Systems

There are 2 basic types of standard pump sets:

- The Septic Tank and Integral Pump set.
- The Domestic Sewage Pump set.

Where gravity drainage is impracticable, or protection against flooding due to surcharge in downstream sewers is required, a pumping system should be installed.

Where foul water drainage from a building is to be pumped, the effluent receiving chamber should be sized to contain 24-hour inflow to allow for a disruption in service.

DESIGN CONSIDERATION FOR LOCATION OF PUMPS

- Units should be installed below ground
- Mains supply of 230 volt, single phase 50Hz is recommended
- Dry site - 150mm concrete base with pea gravel backfill
- Wet site - 150mm layers of hardcore concrete base with backfilling of concrete

SURFACE WATER

Surface water drainage is permitted by the use of one of the following systems listed in order of priority:

- An adequate soakaway or some other adequate filtration system; or where this is not reasonably practicable,
- A watercourse; or where this is not reasonably practicable,
- A dedicated surface water drainage system leading to a public surface water sewer

It should be noted that this 'priority' is the reverse, previously described for foul drainage. It should help to minimise surface water entering the foul drainage system, which can often overload the capacity of the sewer and cause flooding.

Mains Drainage

BS EN 752:2008 adopts the "flat rate of rainfall" method for assessing the peak discharge of surface water and is suitable for drains that do not exceed 200m in length. See table 4.37, which assumes a flat rate of rainfall of 50mm/hour. This rainfall intensity is regarded as satisfactory by most regulatory bodies, however some areas of the country are susceptible to heavy rainfall so 75mm/hour may be required by the authority. All of the rainfall on impervious areas should be assumed to reach the drain, whilst all pervious areas should be disregarded from the equation.

Soakaways

Soakaways can only be considered in permeable ground conditions and should be positioned in areas where stability and support to foundations of adjacent structures can be maintained. Where any doubt exists as to the suitability of the ground, it may be necessary to obtain permeability figures by ground investigation. This should be carried out by a recognised Soils Engineer or Geologist who will then recommend on the suitability of soakaways

Further information is given in BRE Digest 365 and BS 6297:2007+A1:2008

Modern soakaways are generally constructed of perforated pre-cast concrete rings to allow water to percolate away.
Other soakaways may take the form of land drains, traditional brick built pits jointed in honeycomb bond, or a combination of the above.

Type of surface effective design area (m^2)

Paved areas plan area
Flat roof plan area of roof
30° roof pitch plan area x 1.29
45° roof pitch plan area x 1.50
60° roof pitch plan area x 1.87
70° roof pitch elevational area x 0.5

Table 4.37: Calculation of area drained

Soakaways and other forms of Filtration Drainage

Soakaways and other forms of filtration may not be possible. Filtration devices should not be built:

- Within 5m of a building or road or in areas of unstable land
- In ground where the water table reaches the bottom of the device at any time of the year
- Too close to other filtration devices such that the overall capacity of the ground is exceeded or the effectiveness of the design or system is impaired
- Where the presence of any contamination in the runoff could result in pollution of the sub soil or groundwater source or resource

Percolation tests should be carried out to confirm the suitability of a filtration system.

Soakaways should be designed in accordance with BS EN 752:2008 or BRE Digest 365 Soakaway design.

COMBINED AND SEPARATE SYSTEMS

Combined Systems

It may be necessary to install surface and foul water drains separately even where a site is being served by an existing combined sewer. This should be confirmed with relevant Authorities prior to designing the drainage.

When a one pipe system is installed, it is important that all surface water fittings have integral traps so that foul gases do not cause a nuisance.

BS EN 752:2008 states that a combined drain should be capable of accepting peak surface and foul water flows. It is also good design practice to ensure that self-cleansing velocity (0.75l/s) is achieved when only foul water flow is entering the drain (i.e. when there is no rain).

Separate Systems

Separate systems of drains should be provided for foul water and rainwater where:

- The rainwater is not contaminated; and
- The drainage is to be connected either directly or indirectly to the public sewer system and either –

    1. The public sewer in the area comprises separate systems for foul water and surface water; or
    2. A system of sewers, which provides separate conveyance of surface water, is under construction or is proposed.

SUBSOIL DRAINAGE OF GARDENS

Avoid flooding of garden areas

Subsoil drainage may be necessary in garden areas where:

- Site works have affected the natural flow of ground water within 4 m of the dwelling e.g. exposing of underground springs (See diagram 4.38)
- Ground water table rises to within 250 mm of the finished ground within 4 m of the dwelling (See diagram 4.39)
- The drainage of the subsoil is poor and the ground contours make the site prone to waterlogging within 4 m of the dwelling (See diagram 4.40).

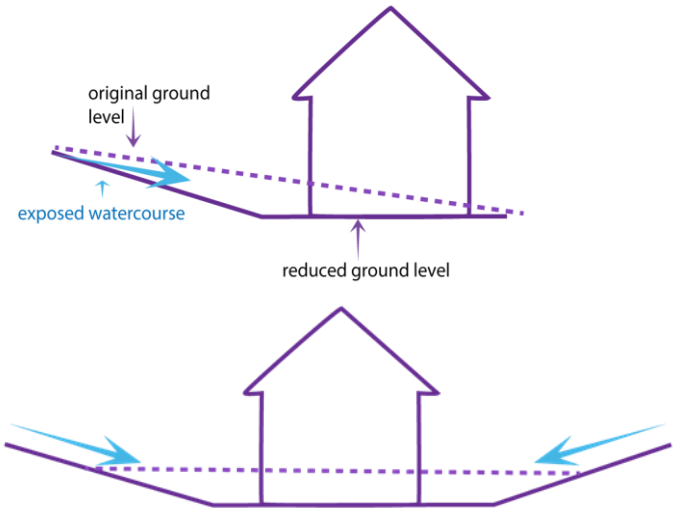

Provide land d
underground v
dwelling.

Provide land drainage if water table rises within 250mm of finished ground level within 4 m of the dwelling.

Diagram 4.38: Gr

Diagram 4.39: Ground water – high water table

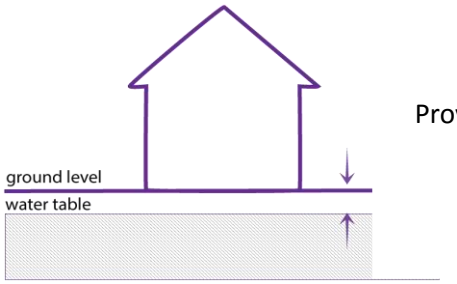

Provide land drainage if subsoil is poor draining and the ground contours make the site prone to waterlogging within 4m of the dwelling.

Diagram 4.40: Ground water – waterlogged site

Layout of Land Drains

On sloping sites drain runs should be located perpendicular to the fall of the site.

Land drains should be located adjacent to paths, drives and outbuildings. The pipe soffit should be located at least 400 mm below the finished ground level and the backfill consolidated to the same degree of compaction as the adjacent soil.

Where retaining walls are provided, a land drain should be provided on the retained soil side of the wall, adjacent to the foundations.

Where required, land drains should be laid across the site in a regular pattern. The spacing between each drain will depend upon the permeability of the subsoil, varying from 3m for heavy clays to 18 m for permeable soils (See diagrams 4.41 and 4.43).

Construction of Land Drains

Drain materials should comply with either:

- BS 1194 Concrete porous pipes
- BS 65:1991 or BS 1196:1989 Clayware pipes
- BS 4962:1989 Plastic pipes
- Or possess independent Third Party certificates acceptable to Build-Zone.

Land drains should be laid to a uniform gradient with falls of not less than 1:200 and as recommended by the pipe manufacturer.

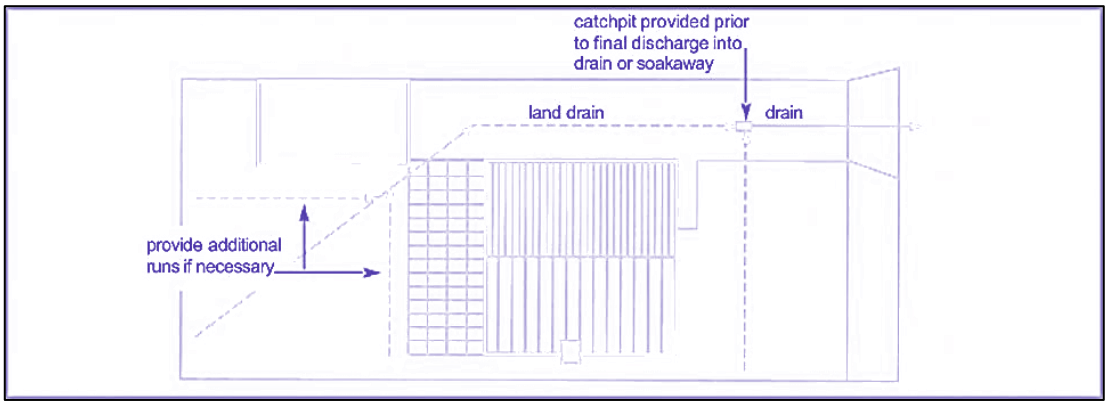

Diagram 4.41: Typical subsoil drainage layout for single plots

Generally the minimum pipe diameters currently available for each land drain material provide adequate drainage capacity for individual plots. On multiple plot sites (where collector land drains are used), or very wet sites, larger diameter pipes may be necessary and should be sized in accordance with manufacturer's design data.

Land drains should be jointed in accordance with manufacturer's instructions with perforations laid uppermost where appropriate.

Diagram 4.41 and 4.44 show typical subsoil drainage schemes for single and multiple plot sites.

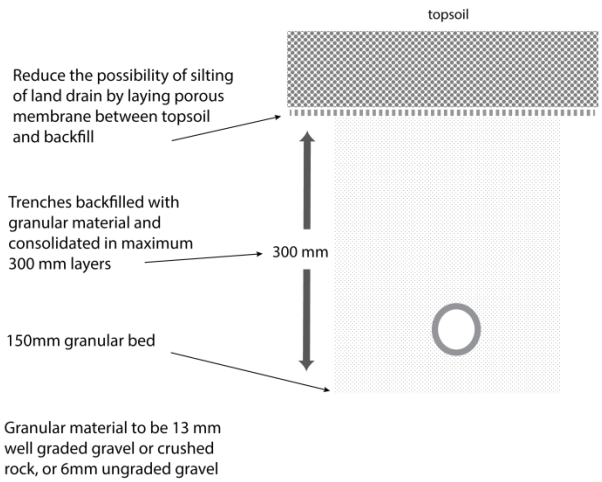

Diagram 4.42: Backfilling of trenches

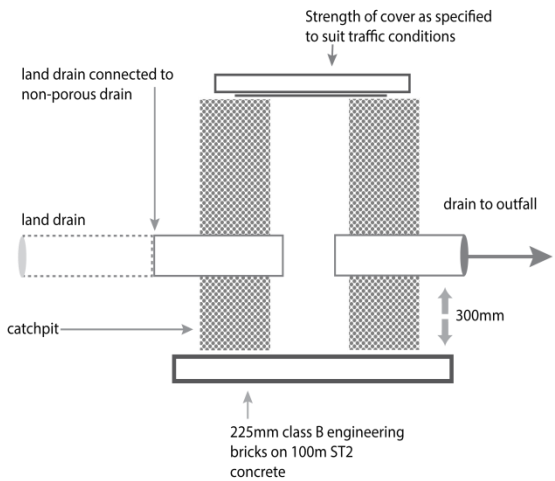

Diagram 4.43: Catchpit detail

Land drains should be bedded and backfilled with either:

- 13 mm well graded gravel or crushed rock, or
- 6 mm ungraded gravel (pea shingle)

It is recommended that a membrane is laid over the granular backfill to prevent silting of the drain (See diagram 4.42).

Ensuring Proper Drainage of Groundwater away from the Site

Land drains should discharge into either:

- A soakaway located in porous ground at least 5m from any building. For soakaway design refer to BRE Digest 365
- A watercourse (subject to approval of the Water Authority)
- A storm drain
- A foul drain (subject to the approval of the Water Authority)

Where final discharge is into a drain or soakaway, a catchpit should be provided (See diagrams 4.43 and 4.44).

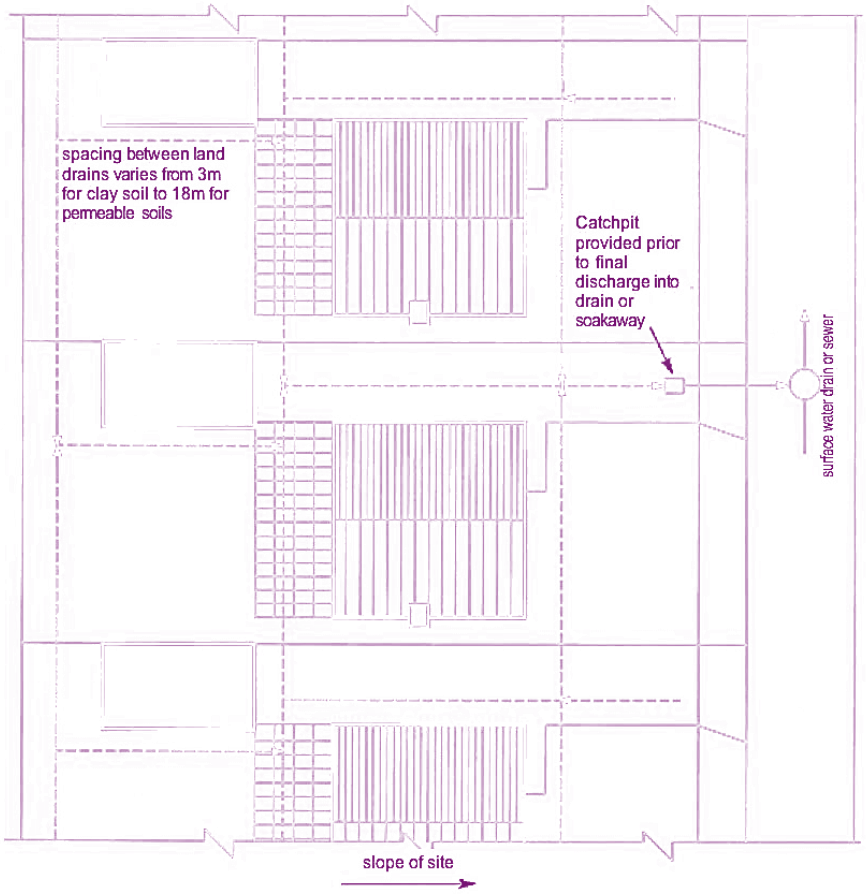

Diagram 4.44: Typical subsoil drainage for multiple plots

4.7 Basements

GENERAL

The basement should be designed and constructed in accordance with the guidance contained in the following appropriate document:

- England & Wales Approved Document - Basement for Dwellings Approved Document C - Site Preparation and resistance to moisture.
- Scotland - Section 3 – Environment
- N.Ireland - Part C - Resistance to moisture

Build-Zone strongly recommends the use of specialist companies for the design and installation of tanking systems. Additionally, a 10-year insurance backed warranty for workmanship and materials is required in most cases.

SITE INVESTIGATION

Before starting any design or construction work, a site investigation should be made to establish the ground conditions (including the type of subsoil), the level of the water table (including the provision for natural drainage), the location of any existing drains or other services, the presence of contaminants and whether there is a risk from radon and other gases. Consideration should also be given as to the position of tunnels, ducts, tube and railway lines and other national infrastructure networks in the investigation process.

CONTAMINANTS

If the site investigation indicates the presence in the ground of solid or liquid contaminants, natural gases (e.g. radon) or landfill gases, then appropriate measures should be taken to limit their effect on the basement and on the remainder of the dwelling.

In addition to complying with the provisions of Approved Document C, the possible effects of contaminants on the materials used in basement construction should be considered.

UNDERGROUND SERVICES AND DRAINAGE

With the agreement of the appropriate Statutory Authority, any services which are affected by the construction work should be re-routed around the building, or the building and the services should be designed to enable the services to run under the building, again with their agreement.

The building should be orientated and designed to avoid the risk of increasing hydrostatic pressure. Where this is not practicable, the waterproofing system should be designed to withstand a full hydrostatic head. Provision should be made for maintainable sub-ground drainage to control or maintain the external environment for which the waterproofing system was designed.

EXCLUSION OF MOISTURE

Walls and floors below external ground level and the junctions between them should:

- Provide resistance to ground moisture reaching the internal surface of the wall or upper surface of the floor so that the environmental conditions in the basement are appropriate for the intended use
- Not be adversely affected by moisture from the ground

Key to Levels of Protection

Grade 1. Allows some seepage and damp patches. (Recommended as a minimum for garages and other non-habitable spaces)

Grade 2. Allows no water penetration but moisture penetration is acceptable.

Grade 3. No water penetration and provides dry environment. (Required as a minimum for habitable accommodation)

Grade 4. Controlled environment which needs air conditioning.

Similar wall constructions can be used for Grades 2, 3 and 4 with improvements in dryness being obtained by the degree of heating, ventilation and moisture control. It is advisable to provide ventilation to all basements (heated or unheated) so that any moisture vapour either generated within the dwelling, or brought in through the structure, is adequately controlled.

Tanking to basements should be properly connected to and made continuous with wall dpc's (See diagrams 4.45 - 4.50). Perforations of the tanking membrane e.g. by service entry pipes should be avoided.

Suitable tanking systems include mastic asphalt, combined bitumen/polythene membranes and proprietary tanking systems possessing independent Third Party certificates acceptable to Build-Zone. All tanking systems should be installed in accordance with the manufacturer's instructions and provided with a 10 year insurance backed guarantee covering both materials and workmanship.

Sheet materials such as polythene are not deemed suitable for tanking

Tanking should be designed to resist mechanical damage and the effects of hydrostatic pressure. The tanking system can be provided to the internal (a loading coat should be provided to prevent accidental damage to the water proofing membrane) or external face of the basement wall, alternatively the wall itself can be designed to resist the passage of moisture and the forces applied (see diagrams 4.46 and 4.47).

All basements should be designed by an Expert to be structurally stable and resist the passage of moisture. A high level of workmanship and site supervision is essential, particularly when incorporating a reinforced concrete design in accordance with BS EN 1992-1-1:2004.

Whichever system or design is proposed, it is essential that the specification and/or the manufacturer's details are forwarded to Build-Zone prior to commencement and preferably at design stage, for approval.

A maintainable land drain should be provided around the perimeter of the basement at low level and the side of the basement wall back filled with granular material. Workmanship should comply with BS 8102:2009.

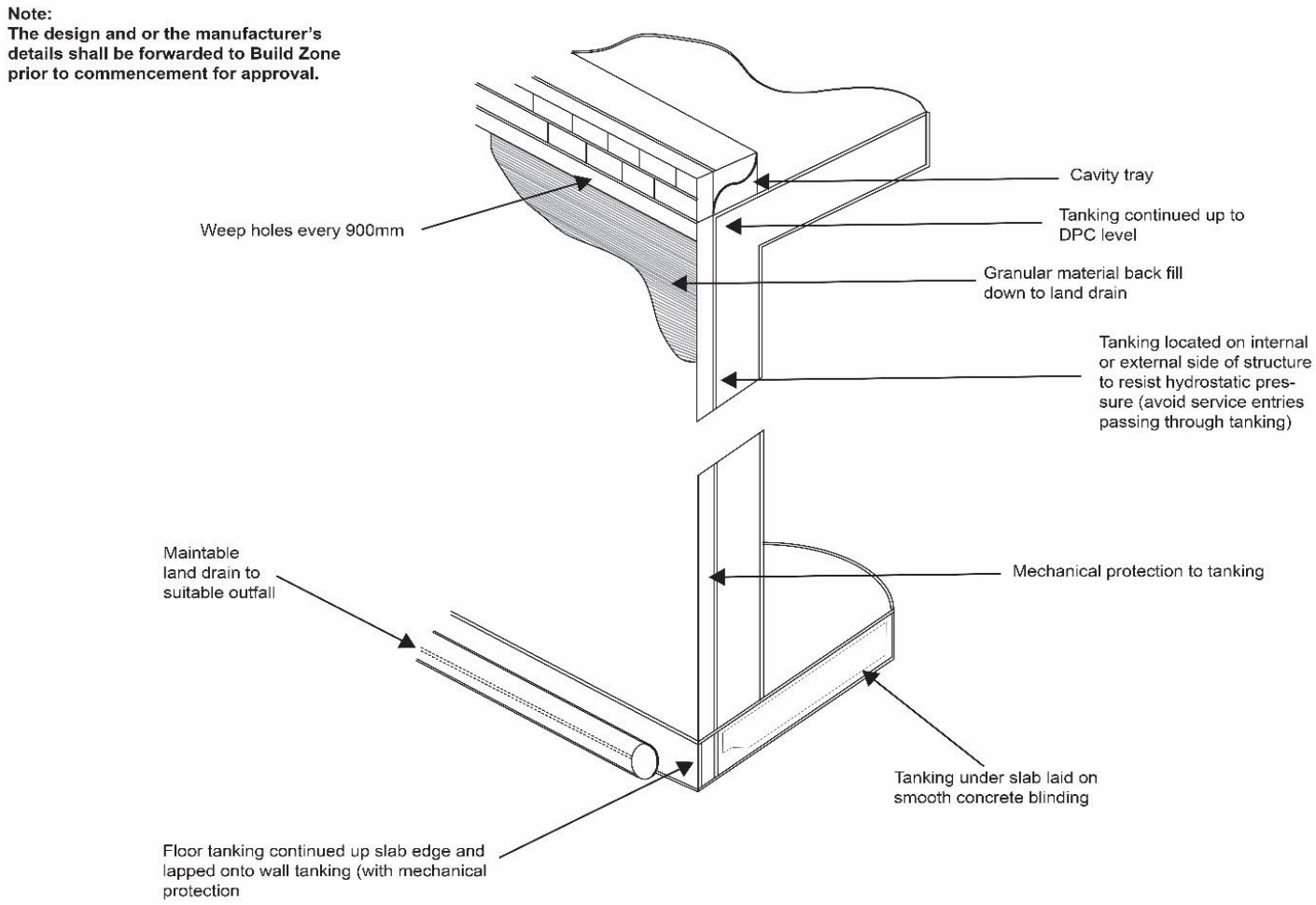

Diagram 4.45: Tanking to basements

The following criteria should be considered in the selection of the waterproofing system to be adopted:

- Establish the position of the water table with respect to the underside of the lowest floor level according to the classification as follows:
    - HIGH - The water table is above the underside of the lowest basement floor slab level (where because of insufficient permeability of the soil, percolating water is held above the underside of the lowest floor level, resulting in hydrostatic pressure).
    - LOW - The water table is permanently below the underside of the proposed basement floor level.
    - VARIABLE – The water table varies between the two levels described above. Any design requirement will need to take this factor into consideration.
- Establish the drainage capabilities of the soil (usually via soil analysis).
- Establish whether or not the tanking should be continuous:
    - NO - Where the water table is below the lowest floor level and the drainage characteristics of the soil are good, and will confidently remain so.
    - YES - In all other cases (preferred option).

  In all situations a maintainable land drain should be provided at the base of the retaining wall (basement wall).
- Choose a suitable construction method to meet the tanking/waterproofing requirements. Typical tanking details are shown in diagrams 4.46 - 4.50.
- Consider the type of foundation and its suitability for providing a continuous waterproofing structure.
- Establish the most suitable form of tanking system to suit the site conditions. In considering which system to use, it is important to take account of any aggressive materials found in the soil or ground moisture. All systems whether cementitious, liquid applied or sheet membrane should have Third Party accreditation and be installed in accordance with the manufacturer's instructions (preferably by an approved installer).
- The designer of a basement must ensure that all necessary details (service penetrations, change of level or direction, window/door reveals etc.) are shown.
- A high level of workmanship and supervision is essential for all tanking systems.

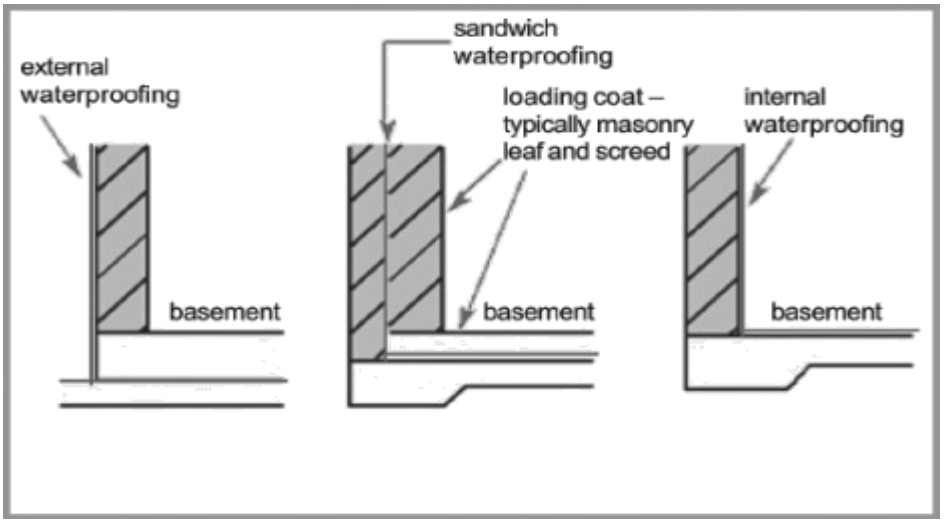

Diagram 4.46: Types of tanking protection to basement construction

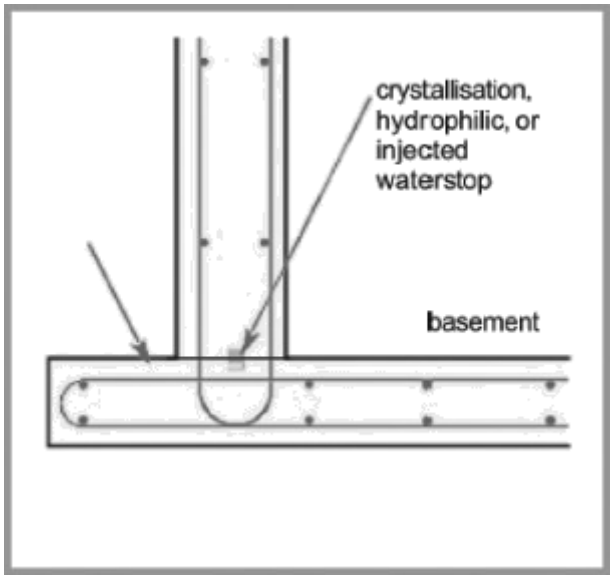

Diagram 4.47: Structurally integral basement construction

DETAILING

Once the type of wall construction and the location of the tanking system have been established, consideration must be given to the detailing, particularly the continuity of the damp-proofing system to prevent any potential ingress of moisture. Diagrams 4.48 - 4.50 provide typical guidance on how to overcome linking details to achieve continuity.

These diagrams are only to be used as a guide, the principles will remain but specific details may change depending upon the tanking system and wall type adopted.

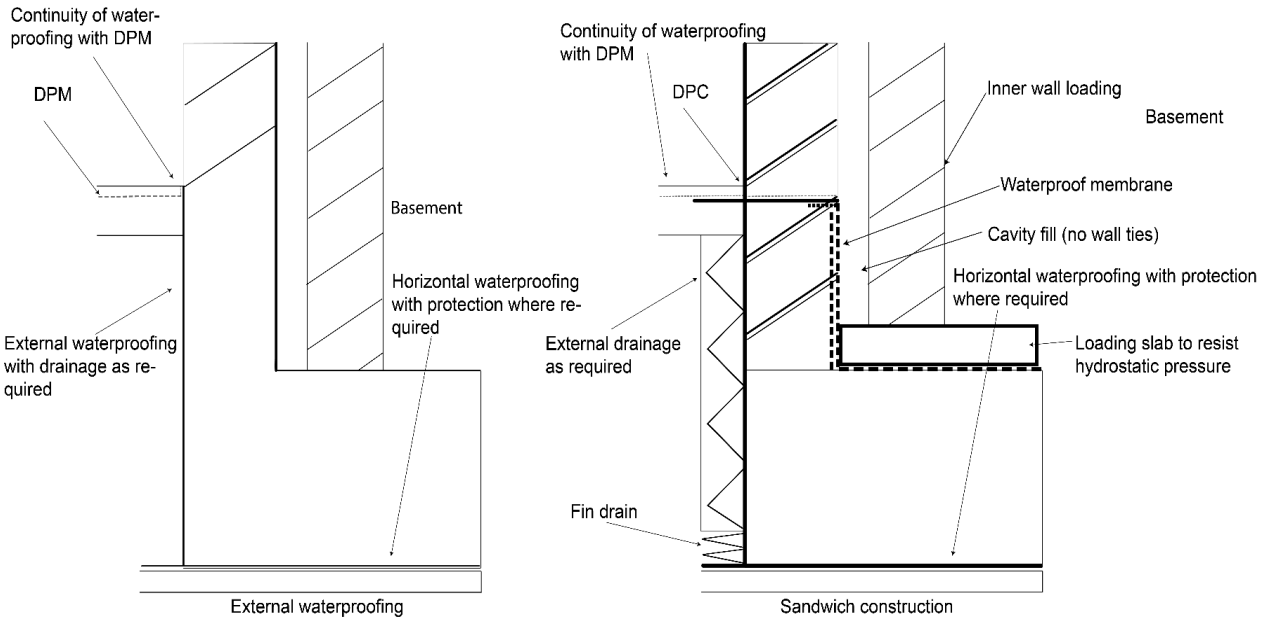

Diagram 4.48: Maintain continuity of waterproofing

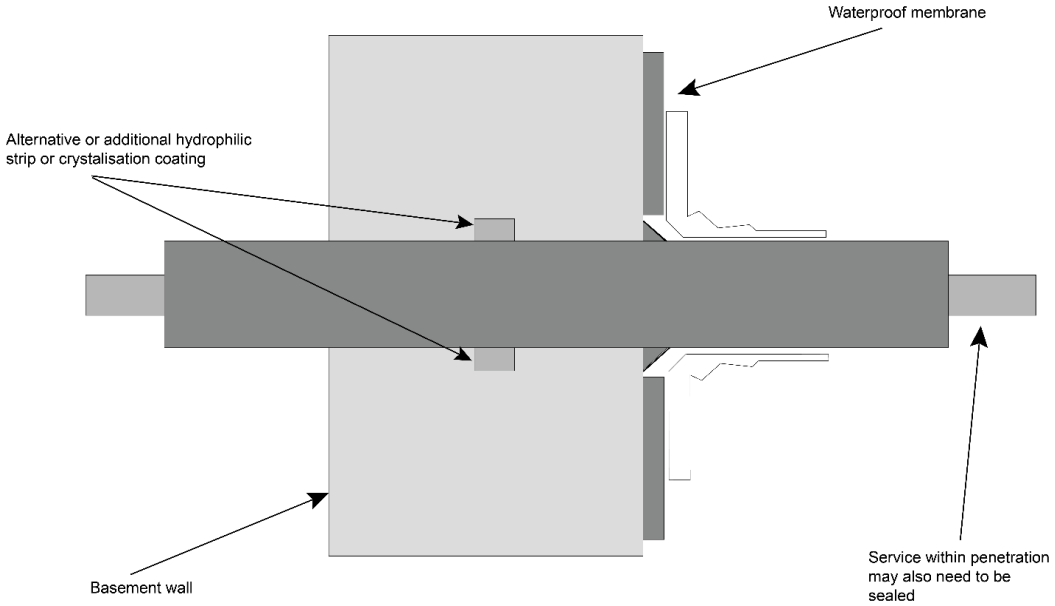

Diagram 4.49: Penetration of services through waterproofing

VENTILATION TO BASEMENTS

Habitable rooms including kitchens, utility rooms, bathrooms and non-habitable rooms (such as store rooms and workshops) located within a basement should meet the requirements of Approved Document F.
All penetrations through a basement wall should be avoided wherever possible.

All pipework and drainage within a basement should comply with the requirements of BS EN 752:2008.

DRAINAGE TO BASEMENTS

Wherever possible the soil and vent pipe (SVP), serving the dwelling should be located on the outside of the basement construction. SVPs can be located externally even where there are drainage connections within the basement, however the system must be designed to reduce waterproofing penetrations to a minimum.

The use of proprietary mini pumped systems can be adopted to overcome the need for such service installations.

Where service connections through basement walls cannot be avoided by design and/or layout, they should be designed along the guidance given in diagram 4.49. Where drainage connections pass through the basement wall, allowance should be made for future potential movement.

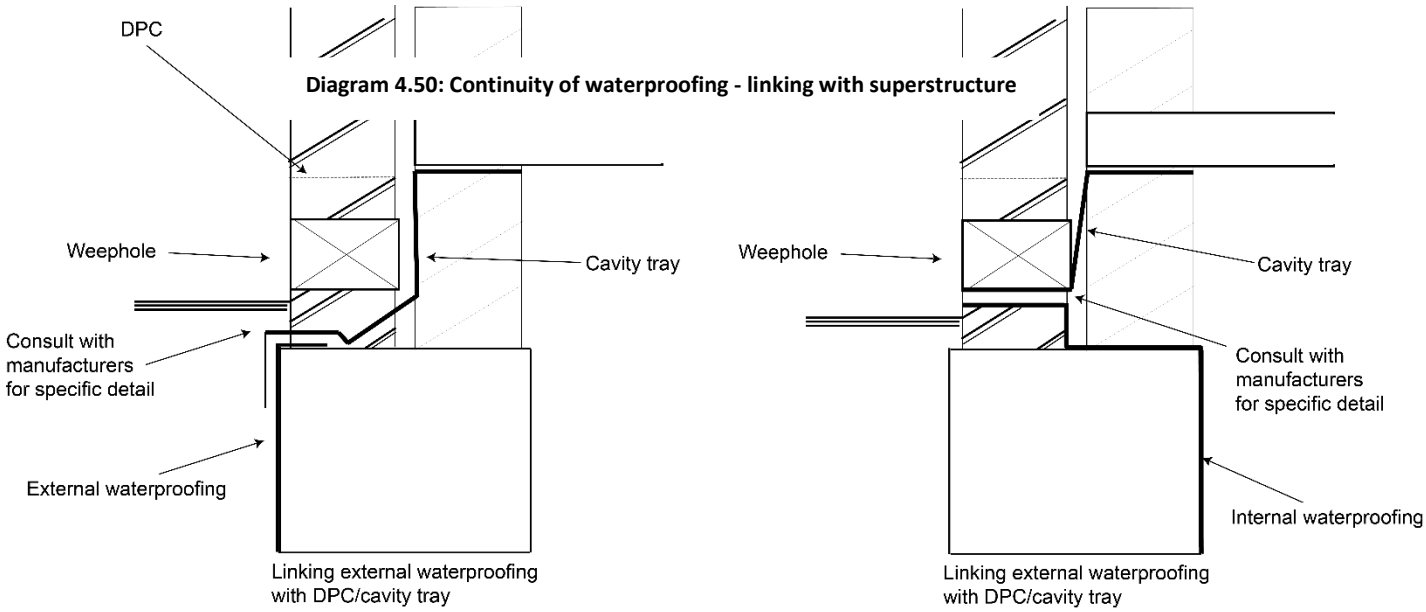

Diagram 4.50: Continuity of waterproofing - linking with superstructure

Provide a rocker pipe having a maximum length of 600mm, positioned not more than 150mm from the external face of the basement wall. All other service entries should be designed to allow tolerance for movement of the ground and/or the structure (consult the supply company for further guidance on suitable tolerances).

Surface water drainage should comply with the requirements of Approved Document H and BS EN 752:2008. Access areas of basement level and light wells to windows should be provided with suitable surface water drainage to prevent flooding.

MEANS OF ESCAPE

There is a risk that in the event of a fire in a basement or ground storey, a single stairway may become blocked by smoke. If the basement contains any habitable room an alternative means of escape must be provided.

ADDITIONAL GUIDANCE

British Cement Association. Basement waterproofing: Design guide.

British Cement Association. Basement waterproofing: Site guide.